APPLICABLE PRODUCTS		
PRODUCT NAME	RECOMMENDED HARDWARE (INCLUDED)	BOLT PATTERN
KEYENCE OP-88310	(2) S.H.C.S. - M4-0.7mm X 8mm 18-8SS (2) FLAT WASHER - M4 18-8SS	A
AD&D HDPL-BALLBASE	(4) S.H.C.S. - M6-1.0mm X 16mm 18-8SS	B

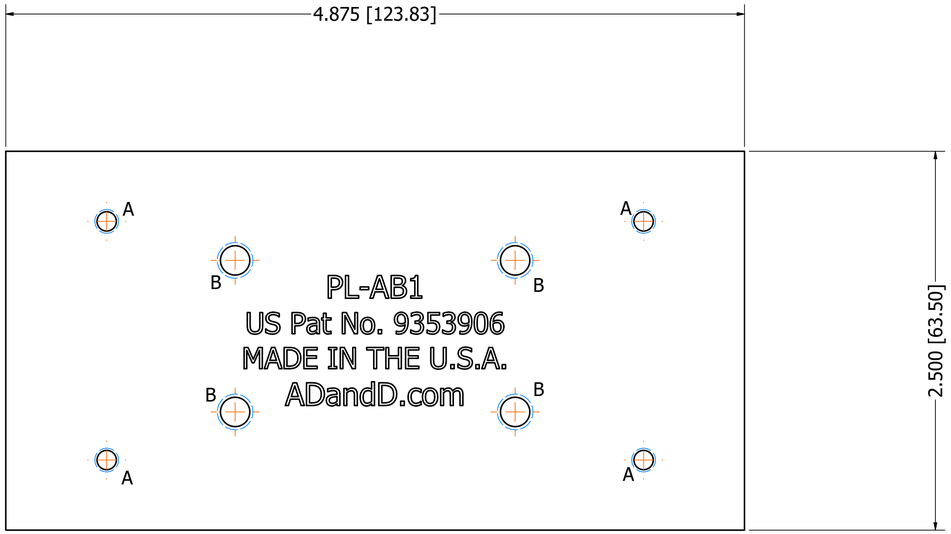

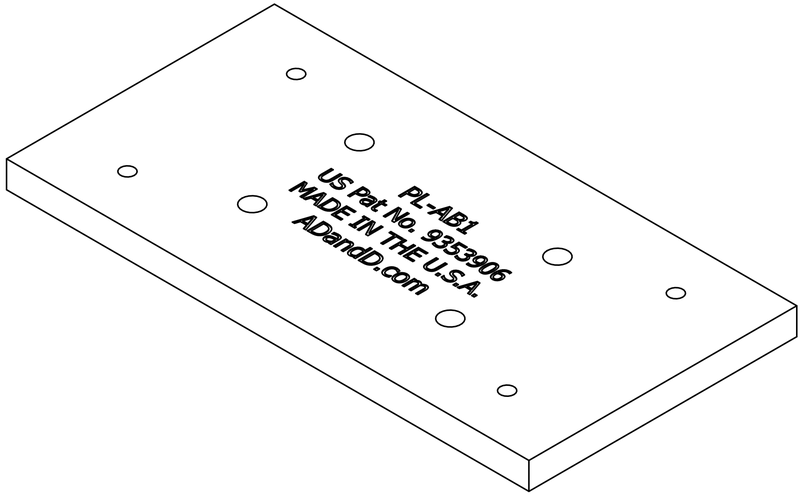

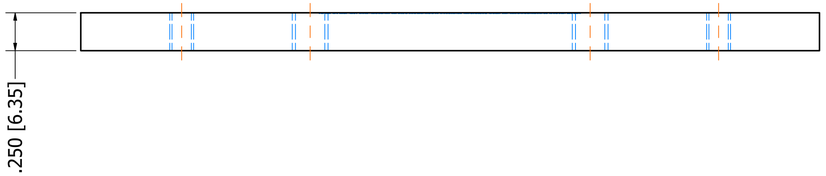

ZONE	REV	DESCRIPTION	DATE	APPROVED BY
	A	RELEASED TO PRODUCTION	3/6/2020	S. RILEY

REVISIONS

PATENT PENDING

BREAK ALL SHARP EDGES AND REMOVE ALL BURRS UNLESS OTHERWISE SPECIFIED

MARK DETAILS WITH P/N, MATERIAL & HEAT TREAT SPEC UNLESS OTHERWISE SPECIFIED

ALL WEIGHTS ARE ESTIMATED AND SHOULD NOT BE USED IN LOADING CALCULATIONS

STANDARD TOLERANCE
UNLESS OTHERWISE SPECIFIED

2 PLACE DEC. ± .030
3 PLACE DEC. ± .005
4 PLACE DEC. ±.0005
ANGLES ± 1°

THIRD ANGLE PROJECTION

GEOMETRIC CHARACTERISTIC SYMBOLS
PER ASME Y14.5M - 1994

FLATNESS		CIRC RUNOUT	
STRAIGHTNESS		TOTAL RUNOUT	
CIRCULARITY		POSITION	
CYLINDRICITY		CONCENTRICITY	
PROFILE OF A SURFACE		DIAMETER	
PERPENDICULARITY	M	AT MAX MATL CONDITION	
PARALLELISM	S	REGARDLESS OF FEATURE SIZE	
ANGULARITY	L	AT LEAST MATL CONDITION	
	-A-	DATUM FEATURE	

ADandD.com Pop-Link® Mounting Systems

POP-LINK ADAPTER BRACKET 1

MATERIAL:		DESIGNED BY:Doug Biddinger
FINISH:		DRAWN BY: S. RILEY
WT.(LBS): 0.293 lbmass		DRAWN DATE: 5/11/2020
	SHEET. SIZE: D	SCALE: 2 / 1
DETAIL NO. PL-AB1		REV. A

APPLICABLE PRODUCTS		
PRODUCT NAME	RECOMMENDED HARDWARE (INCLUDED)	BOLT PATTERN
VESA MOUNT 75	(4) S.H.C.S. - M4-0.7mm X 12mm 18-8SS	A
VESA MOUNT 100	(4) S.H.C.S. - M4-0.7mm X 12mm 18-8SS	B
AD&D PL-BALLBASE	(3) S.H.C.S. - M6-1.0mm X 10mm 18-8SS	C
AD&D HDPL-BALLBASE	(4) S.H.C.S. - M6-1.0mm X 14mm 18-8SS	D

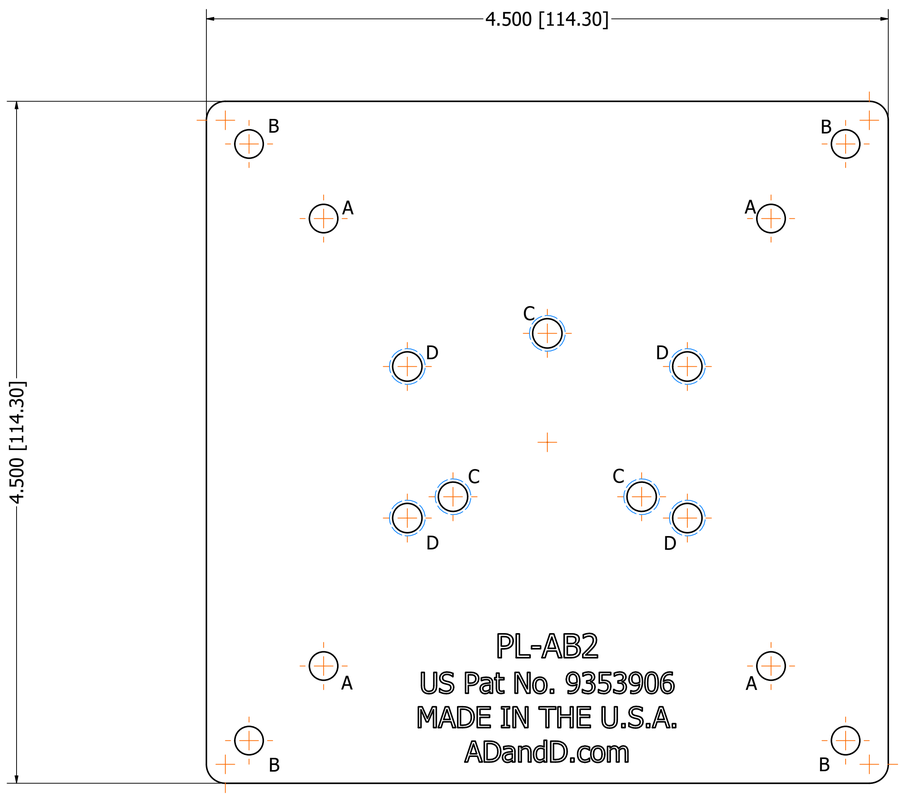

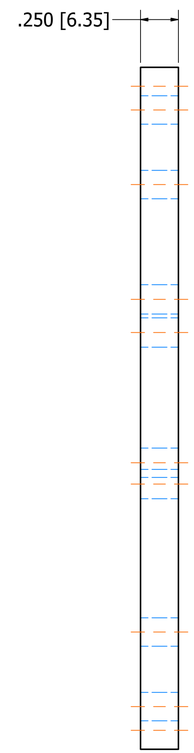

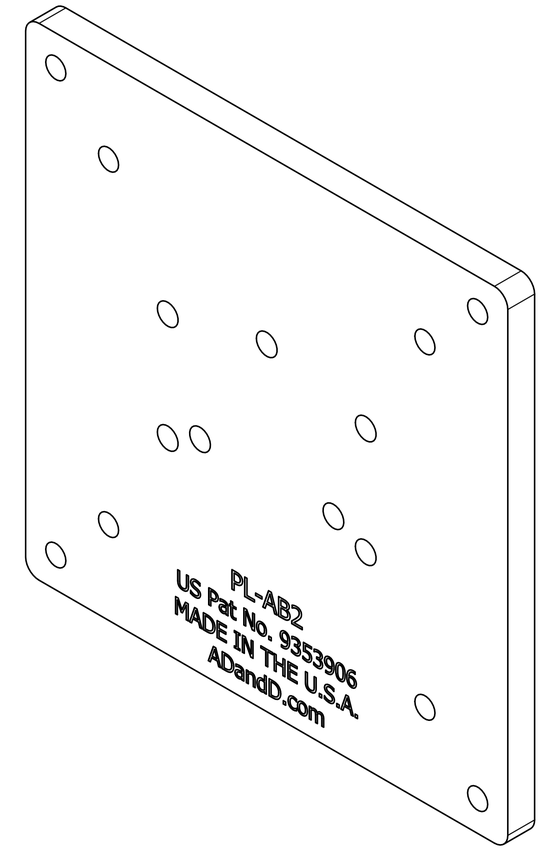

ZONE	REV	DESCRIPTION	DATE	APPROVED BY
	A	RELEASED TO PRODUCTION	3/6/2020	S. RILEY

REVISIONS

PATENT PENDING

BREAK ALL SHARP EDGES AND REMOVE ALL BURRS UNLESS OTHERWISE SPECIFIED

MARK DETAILS WITH P/N, MATERIAL & HEAT TREAT SPEC UNLESS OTHERWISE SPECIFIED

ALL WEIGHTS ARE ESTIMATED AND SHOULD NOT BE USED IN LOADING CALCULATIONS

STANDARD TOLERANCE
UNLESS OTHERWISE SPECIFIED

2 PLACE DEC. ± .030
3 PLACE DEC. ± .005
4 PLACE DEC. ±.0005
ANGLES ± 1°

THIRD ANGLE PROJECTION

GEOMETRIC CHARACTERISTIC SYMBOLS
PER ASME Y14.5M - 1994

FLATNESS
STRAIGHTNESS
CIRCULARITY
CYLINDRICITY
PROFILE OF A SURFACE
PERPENDICULARITY
PARALLELISM
ANGULARITY
CIRC RUNOUT
TOTAL RUNOUT
POSITION
CONCENTRICITY
DIAMETER
AT MAX MATL CONDITION
REGARDLESS OF FEATURE SIZE
AT LEAST MATL CONDITION
-A- DATUM FEATURE

ADandD.com Pop-Link® Mounting Systems

PL ADAPTER BRACKET 2 - VESA BRACKET

MATERIAL:	DESIGNED BY:Doug Biddinger
FINISH:	DRAWN BY: S. RILEY
WT.(LBS): 0.483 lbmass	DRAWN DATE: 5/11/2020
SHEET. SIZE: D	SCALE: 2 / 1

DETAIL NO. PL-AB2 REV. A

Table		
PRODUCT NAME	RECOMMENDED HARDWARE (INCLUDED)	BOLT PATTERN
DIGITAL DEVICE (UP TO 6.8" WIDE)	NO HARDWARE	
PL-BALLBASE	(3) S.H.C.S. - M6-1.0mm X 10mm 18-8SS	A

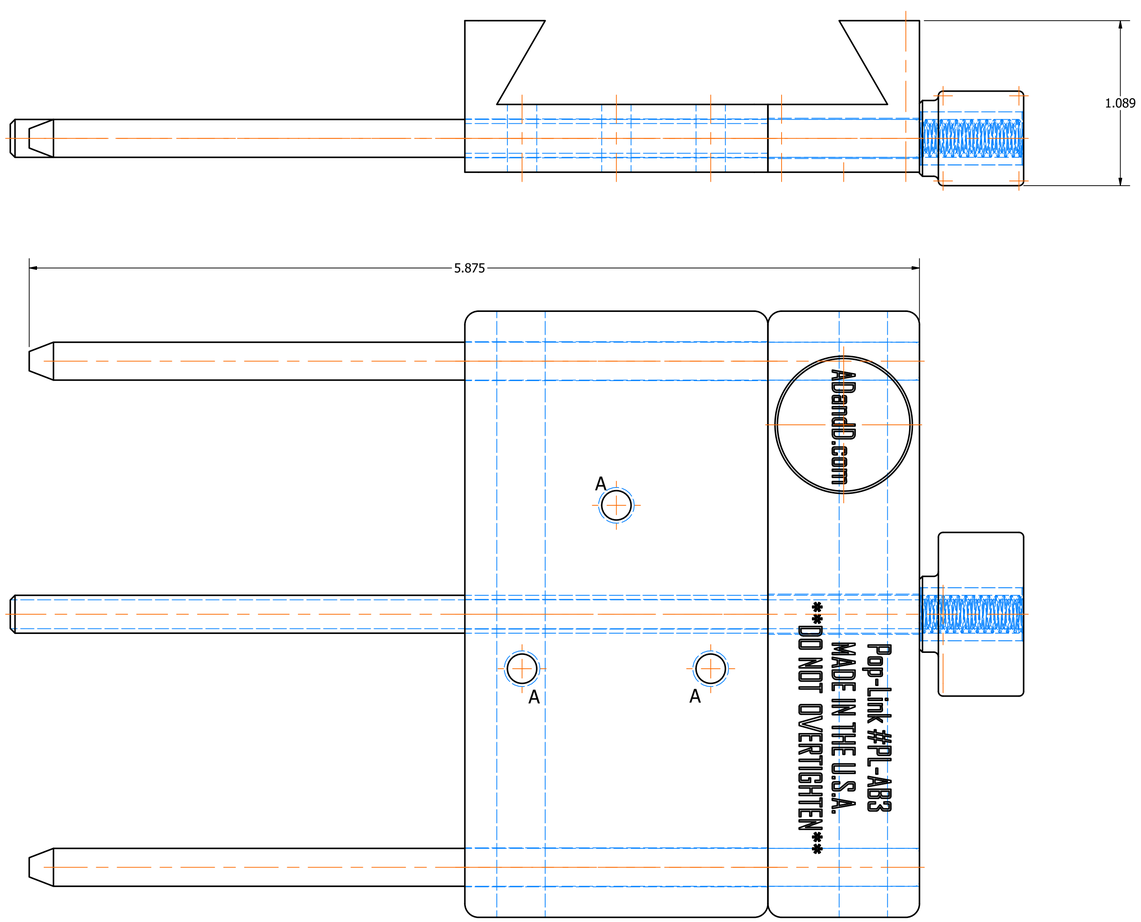

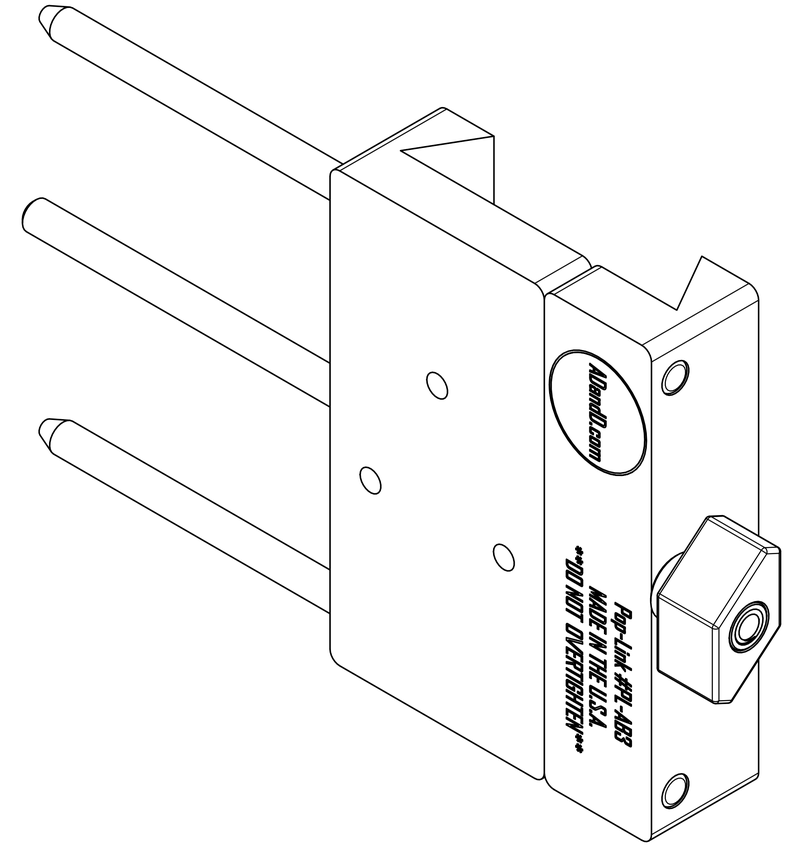

ZONE	REV	DESCRIPTION	DATE	APPROVED BY
	A	RELEASED TO PRODUCTION	3/6/2020	S. RILEY

REVISIONS

PATENT PENDING

BREAK ALL SHARP EDGES AND REMOVE ALL BURRS UNLESS OTHERWISE SPECIFIED

MARK DETAILS WITH P/N, MATERIAL & HEAT TREAT SPEC UNLESS OTHERWISE SPECIFIED

ALL WEIGHTS ARE ESTIMATED AND SHOULD NOT BE USED IN LOADING CALCULATIONS

STANDARD TOLERANCE
UNLESS OTHERWISE SPECIFIED

2 PLACE DEC. ± .030
3 PLACE DEC. ± .005
4 PLACE DEC. ±.0005
ANGLES ± 1°

THIRD ANGLE PROJECTION

GEOMETRIC CHARACTERISTIC SYMBOLS
PER ASME Y14.5M - 1994

FLATNESS
STRAIGHTNESS
CIRCULARITY
CYLINDRICITY
PROFILE OF A SURFACE
PERPENDICULARITY
PARALLELISM
ANGULARITY
CIRC RUNOUT
TOTAL RUNOUT
POSITION
CONCENTRICITY
DIAMETER
AT MAX MATL CONDITION
REGARDLESS OF FEATURE SIZE
AT LEAST MATL CONDITION
-A- DATUM FEATURE

ADandD.com Pop-Link® Mounting Systems

SPENCER CELL PHONE BRACKET

MATERIAL:	DESIGNED BY:S. RILEY
FINISH:	DRAWN BY: S. RILEY
WT.(LBS): 0.906 lbmass	DRAWN DATE: 4/14/2020
SHEET. SIZE: D	SCALE: 2 / 1
DETAIL NO. PL-AB3	REV. A

TABLE		
PRODUCT NAME	RECOMMENDED HARDWARE (INCLUDED)	BOLT PATTERN
KEYENCE #XT-024	(4) S.H.C.S. - M6-1.0mm X 16mm 18-8SS	A
KEYENCE #XT-060	(4) S.H.C.S. - M6-1.0mm X 16mm 18-8SS	A
POP-LINK #HDPL-BASE	(4) S.H.C.S. - M6-1.0mm X 14mm 18-8SS	B

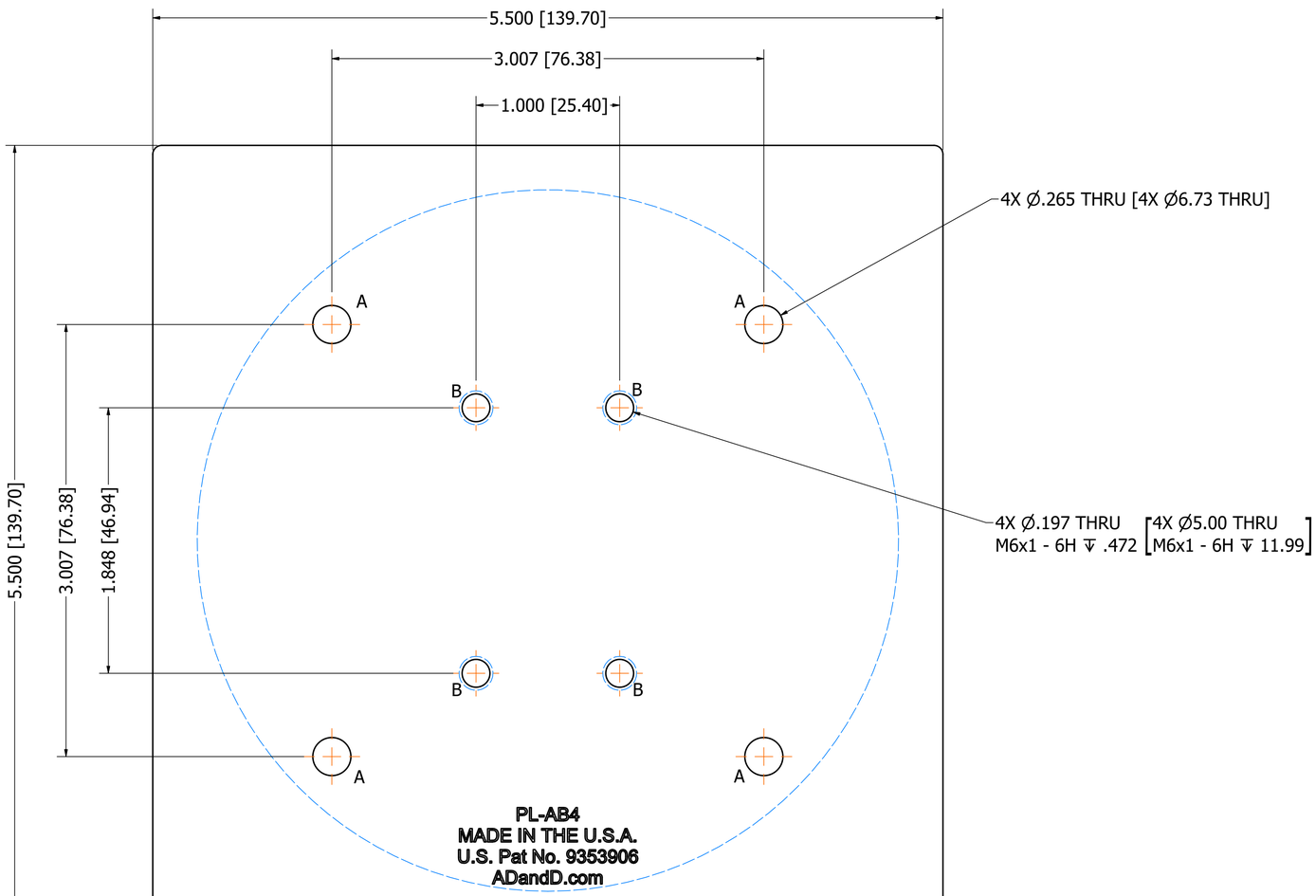

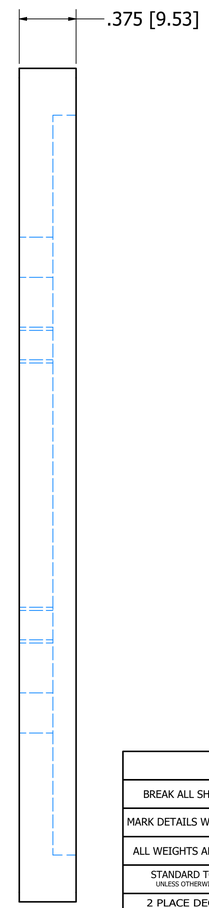

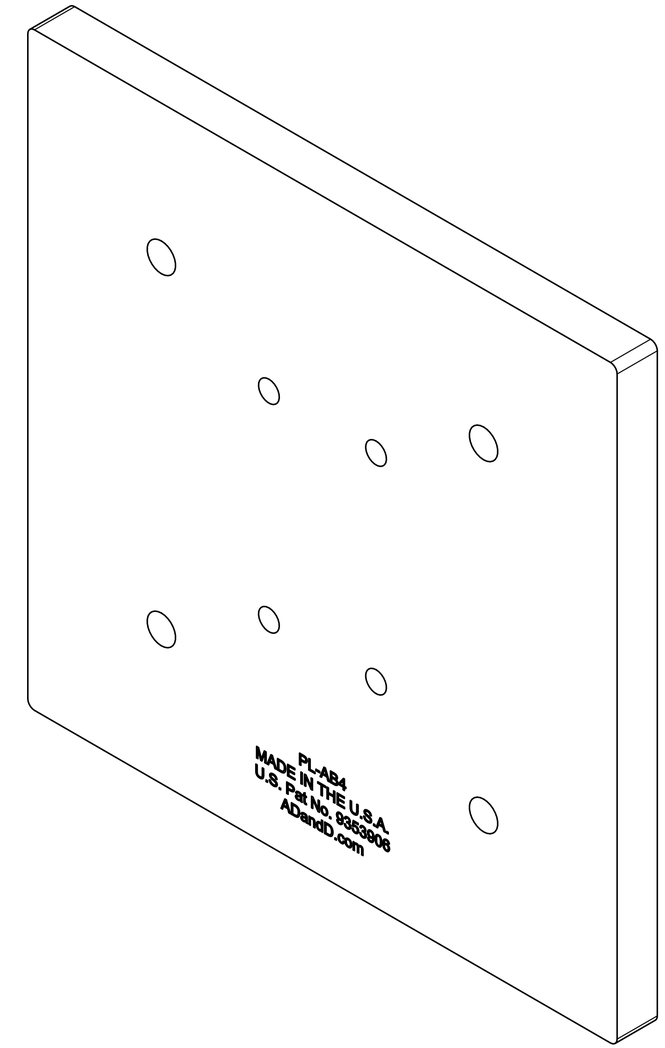

ZONE	REV	DESCRIPTION	DATE	APPROVED BY
	A	RELEASED TO PRODUCTION	3/6/2020	S. RILEY

REVISIONS

PATENT PENDING

BREAK ALL SHARP EDGES AND REMOVE ALL BURRS UNLESS OTHERWISE SPECIFIED

MARK DETAILS WITH P/N, MATERIAL & HEAT TREAT SPEC UNLESS OTHERWISE SPECIFIED

ALL WEIGHTS ARE ESTIMATED AND SHOULD NOT BE USED IN LOADING CALCULATIONS

STANDARD TOLERANCE
UNLESS OTHERWISE SPECIFIED

2 PLACE DEC. ± .030
3 PLACE DEC. ± .005
4 PLACE DEC. ±.0005
ANGLES ± 1˚

THIRD ANGLE PROJECTION

GEOMETRIC CHARACTERISTIC SYMBOLS
PER ASME Y14.5M - 1994

FLATNESS
STRAIGHTNESS
CIRCULARITY
CYLINDRICITY
PROFILE OF A SURFACE
PERPENDICULARITY
PARALLELISM
ANGULARITY
CIRC RUNOUT
TOTAL RUNOUT
POSITION
CONCENTRICITY
DIAMETER
AT MAX MATL CONDITION
REGARDLESS OF FEATURE SIZE
AT LEAST MATL CONDITION
-A- DATUM FEATURE

ADandD.com Pop-Link® Mounting Systems

PL ADAPTER BRACKET AB4

MATERIAL:	DESIGNED BY:S. RILEY
FINISH:	DRAWN BY: S. RILEY
WT.(LBS): 0.820 lbmass	DRAWN DATE: 5/26/2020
SHEET. SIZE: D	SCALE: 2 / 1
DETAIL NO. PL-AB4	REV. A

APPLICABLE PRODUCTS		
PRODUCT NAME	RECOMMENDED HARDWARE (INCLUDED)	BOLT PATTERN
KEYENCE #XR-HT40M /MD	(4) S.H.C.S. - M5-0.8mm X 10mm 18-8SS	A
KEYENCE #XR-HT15M /MD	(4) S.H.C.S. - M5-0.8mm X 10mm 18-8SS	A
KEYENCE #XR-HT40M /MD	(2) S.H.C.S. - M5-0.8mm X 65mm 18-8SS (2) JAM NUT - M5-0.8mm 18-8SS	B
KEYENCE #XR-HT15M /MD	(2) S.H.C.S. - M5-0.8mm X 65mm 18-8SS (2) JAM NUT - M5-0.8mm 18-8SS	B
MICRO EPSILON SCAN CONTROL 30XX	(2) S.H.C.S. - M5-0.8mm X 65mm 18-8SS (2) JAM NUT - M5-0.8mm 18-8SS	D
AD&D #HDPL-BALLBASE	(4) S.H.C.S. - M6-1.0mm X 16mm 18-8SS	C

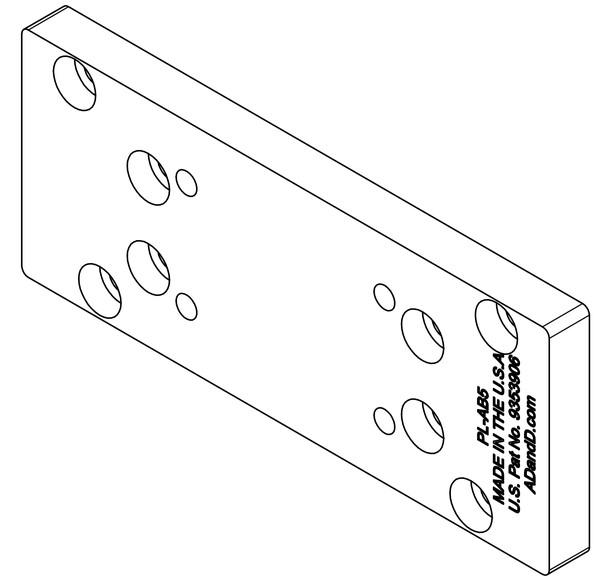

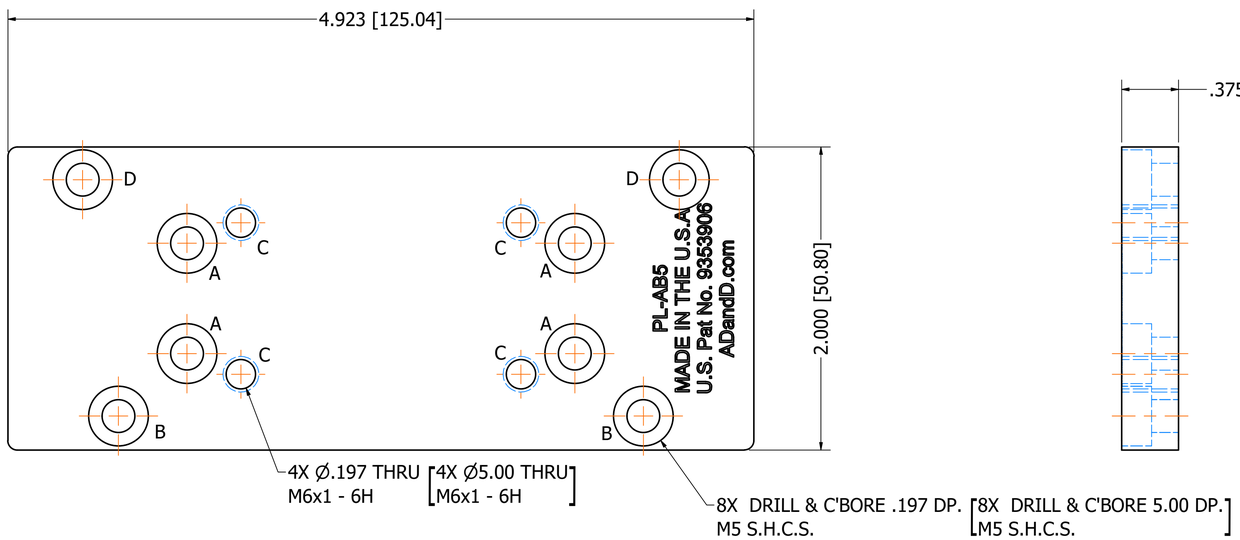

ZONE	REV	DESCRIPTION	DATE	APPROVED BY
	A	RELEASED TO PRODUCTION	3/6/2020	S. RILEY

REVISIONS

PATENT PENDING

BREAK ALL SHARP EDGES AND REMOVE ALL BURRS UNLESS OTHERWISE SPECIFIED

MARK DETAILS WITH P/N, MATERIAL & HEAT TREAT SPEC UNLESS OTHERWISE SPECIFIED

ALL WEIGHTS ARE ESTIMATED AND SHOULD NOT BE USED IN LOADING CALCULATIONS

STANDARD TOLERANCE
UNLESS OTHERWISE SPECIFIED

2 PLACE DEC. ± .030
3 PLACE DEC. ± .005
4 PLACE DEC. ±.0005
ANGLES ± 1˚

THIRD ANGLE PROJECTION

GEOMETRIC CHARACTERISTIC SYMBOLS
PER ASME Y14.5M - 1994

FLATNESS
STRAIGHTNESS
CIRCULARITY
CYLINDRICITY
PROFILE OF A SURFACE
PERPENDICULARITY
PARALLELISM
ANGULARITY
CIRC RUNOUT
TOTAL RUNOUT
POSITION
CONCENTRICITY
DIAMETER
AT MAX MATL CONDITION
REGARDLESS OF FEATURE SIZE
AT LEAST MATL CONDITION
DATUM FEATURE

ADandD.com Pop-Link® Mounting Systems

PL ADAPTER BRACKET AB5

MATERIAL:	DESIGNED BY:S. RILEY
FINISH:	DRAWN BY: S. RILEY
WT.(LBS): 0.332 lbmass	DRAWN DATE: 5/28/2020
SHEET. SIZE: D	SCALE: 2 / 1
DETAIL NO. PL-AB5	REV. A

APPLICABLE PRODUCTS		
PRODUCT NAME	RECOMMENDED HARDWARE (INCLUDED)	BOLT PATTERN
KEYENCE # LJ-V7020 / 7020K	(3) S.H.C.S. - M4-0.7mm X 8mm 18-8SS	A
KEYENCE #LJ-V7060 / 7060K	(3) S.H.C.S. - M4-0.7mm X 8mm 18-8SS	B
KEYENCE #LJ-V7080	(3) S.H.C.S. - M4-0.7mm X 8mm 18-8SS	C
LMI #GOCATOR 2510	(3) S.H.C.S. - M4-0.7mm X 8mm 18-8SS	D
LMI #GOCATOR 2520	(3) S.H.C.S. - M4-0.7mm X 8mm 18-8SS	D
LMI #GOCATOR 2530	(3) S.H.C.S. - M4-0.7mm X 8mm 18-8SS	D
AD&D #HDPL-BALLBASE	(4) S.H.C.S. - M6-1.0mm X 16mm 18-8SS	E
AD&D #PL-BALLBASE	(3) S.H.C.S. - M6-1.0mm X 10mm 18-8SS	F

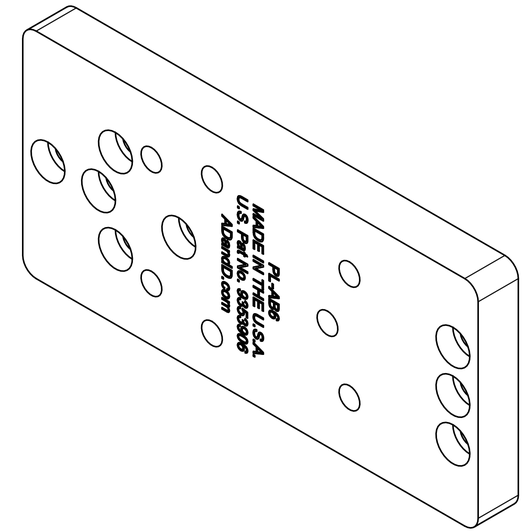

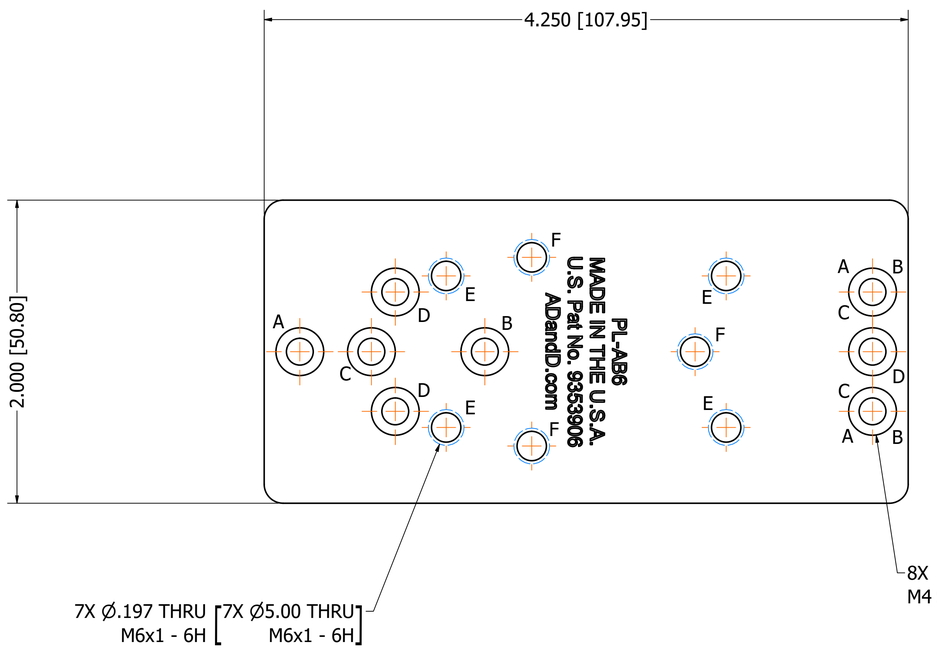

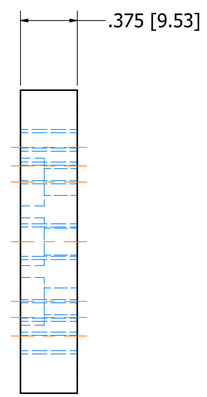

PATENT PENDING

BREAK ALL SHARP EDGES AND REMOVE ALL BURRS UNLESS OTHERWISE SPECIFIED

MARK DETAILS WITH P/N, MATERIAL & HEAT TREAT SPEC UNLESS OTHERWISE SPECIFIED

ALL WEIGHTS ARE ESTIMATED AND SHOULD NOT BE USED IN LOADING CALCULATIONS

STANDARD TOLERANCE UNLESS OTHERWISE SPECIFIED	GEOMETRIC CHARACTERISTIC SYMBOLS PER ASME Y14.5M - 1994	
2 PLACE DEC. ± .030	FLATNESS	CIRC RUNOUT
3 PLACE DEC. ± .005	STRAIGHTNESS	TOTAL RUNOUT
4 PLACE DEC. ±.0005	CIRCULARITY	POSITION
ANGLES ± 1°	CYLINDRICITY	CONCENTRICITY
THIRD ANGLE PROJECTION	PROFILE OF A SURFACE	DIAMETER
	PERPENDICULARITY	AT MAX MATL CONDITION
	PARALLELISM	REGARDLESS OF FEATURE SIZE
	ANGULARITY	AT LEAST MATL CONDITION
	-A-	DATUM FEATURE

ZONE	REV	DESCRIPTION	DATE	APPROVED BY
	A	RELEASED TO PRODUCTION	3/6/2020	S. RILEY

REVISIONS

ADandD.com Pop-Link® Mounting Systems

PL ADAPTER BRACKET AB6

MATERIAL:	DESIGNED BY:S. RILEY
FINISH:	DRAWN BY: S. RILEY
WT.(LBS): 0.289 lbmass	DRAWN DATE: 5/28/2020
SHEET. SIZE: D	SCALE: 2 / 1
DETAIL NO. PL-AB6	REV. A

APPLICABLE PRODUCTS		
PRODUCT NAME	RECOMMENDED HARDWARE (INCLUDED)	BOLT PATTERN
COGNEX #DS1050/1101/1300	(2) S.H.C.S. - M5-0.8mm X 10mm 18-8SS	A
KEYENCE #LJ-V7200	(4) S.H.C.S. - M4-0.7mm X 8mm 18-8SS	B
KEYENCE #LJ-V7300	(4) S.H.C.S. - M4-0.7mm X 8mm 18-8SS	C
AD&D #PL-BALLBASE	(3) S.H.C.S. - M6-1.0mm X 10mm 18-8SS	D
AD&D #HDPL-BALLBASE	(4) S.H.C.S. - M6-1.0mm X 16mm 18-8SS	E

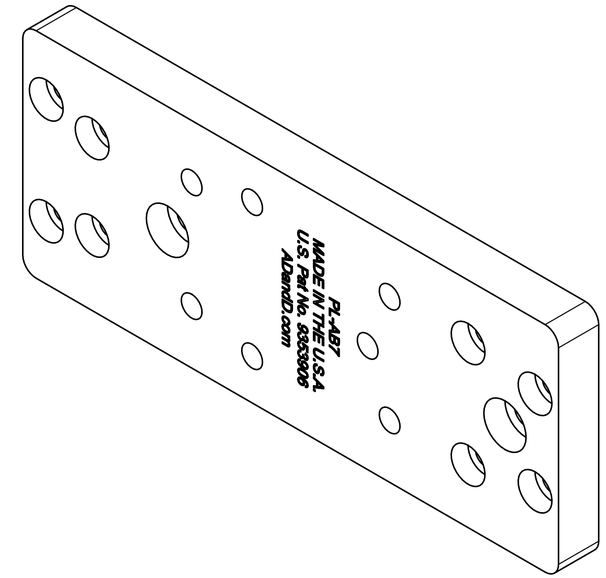

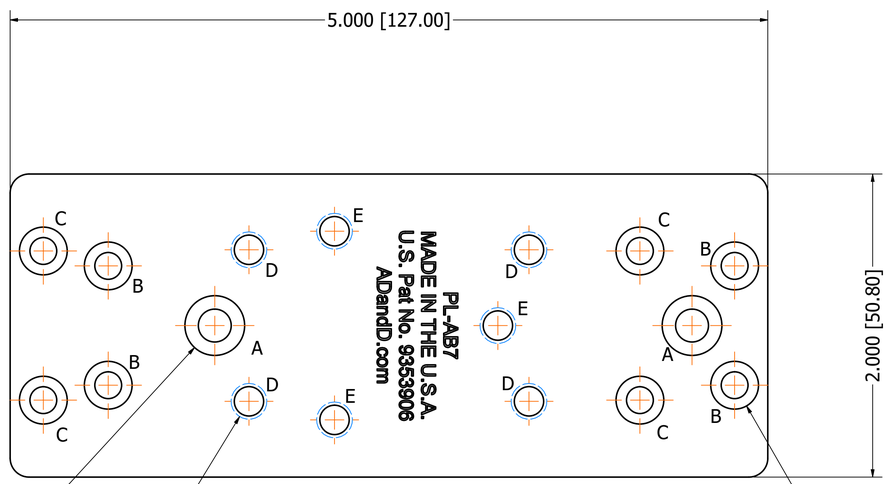

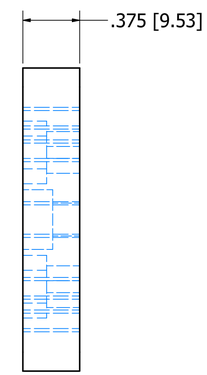

2X DRILL & C'BORE .197 DP. [2X DRILL & C'BORE 5.00 DP.]
M5 S.H.C.S. [M5 S.H.C.S.]

7X Ø.197 THRU [7X Ø5.00 THRU]
M6x1 - 6H [M6x1 - 6H]

8X DRILL & C'BORE .157 DP. [8X DRILL & C'BORE 3.99 DP.]
M4 S.H.C.S. [M4 S.H.C.S.]

ZONE	REV	DESCRIPTION	DATE	APPROVED BY
	A	RELEASED TO PRODUCTION	3/6/2020	S. RILEY

REVISIONS

PATENT PENDING

BREAK ALL SHARP EDGES AND REMOVE ALL BURRS UNLESS OTHERWISE SPECIFIED

MARK DETAILS WITH P/N, MATERIAL & HEAT TREAT SPEC UNLESS OTHERWISE SPECIFIED

ALL WEIGHTS ARE ESTIMATED AND SHOULD NOT BE USED IN LOADING CALCULATIONS

STANDARD TOLERANCE UNLESS OTHERWISE SPECIFIED	GEOMETRIC CHARACTERISTIC SYMBOLS PER ASME Y14.5M - 1994	
2 PLACE DEC. ± .030	FLATNESS	CIRC RUNOUT
3 PLACE DEC. ± .005	STRAIGHTNESS	TOTAL RUNOUT
4 PLACE DEC. ±.0005	CIRCULARITY	POSITION
ANGLES ± 1°	CYLINDRICITY	CONCENTRICITY
THIRD ANGLE PROJECTION	PROFILE OF A SURFACE	DIAMETER
	PERPENDICULARITY	AT MAX MATL CONDITION
	PARALLELISM	REGARDLESS OF FEATURE SIZE
	ANGULARITY	AT LEAST MATL CONDITION
	-A-	DATUM FEATURE

ADandD.com Pop-Link® Mounting Systems

PL ADAPTER BRACKET AB7

MATERIAL:	DESIGNED BY:S. RILEY
FINISH:	DRAWN BY: S. RILEY
WT.(LBS): 0.338 lbmass	DRAWN DATE: 5/28/2020
SHEET. SIZE: D	SCALE: 2 / 1
DETAIL NO. PL-AB7	REV. A

APPLICABLE PRODUCTS		
PRODUCT NAME	RECOMMENDED HARDWARE (INCLUDED)	BOLT PATTERN
KEYENCE #LJ-X8020	(4) S.H.C.S. - M4-0.7mm X 10mm 18-8SS	A
KEYENCE #LJ-X8060	(4) S.H.C.S. - M4-0.7mm X 10mm 18-8SS	B
KEYENCE #LJ-X8080	(4) S.H.C.S. - M4-0.7mm X 10mm 18-8SS	C
KEYENCE #LJ-X8200	(3) S.H.C.S. - M5-0.8mm X 16mm 18-8SS	D
KEYENCE #LJ-X8400	(3) S.H.C.S. - M5-0.8mm X 16mm 18-8SS	E
KEYENCE #LJ-X8900	(4) S.H.C.S. - M5-0.8mm X 16mm 18-8SS	F
AD&D #PL-BALLBASE	(3) S.H.C.S. - M6-1.0mm X 10mm 18-8SS	G
AD&D #HDPL-BALLBASE	(4) S.H.C.S. - M6-1.0mm X 16mm 18-8SS	H

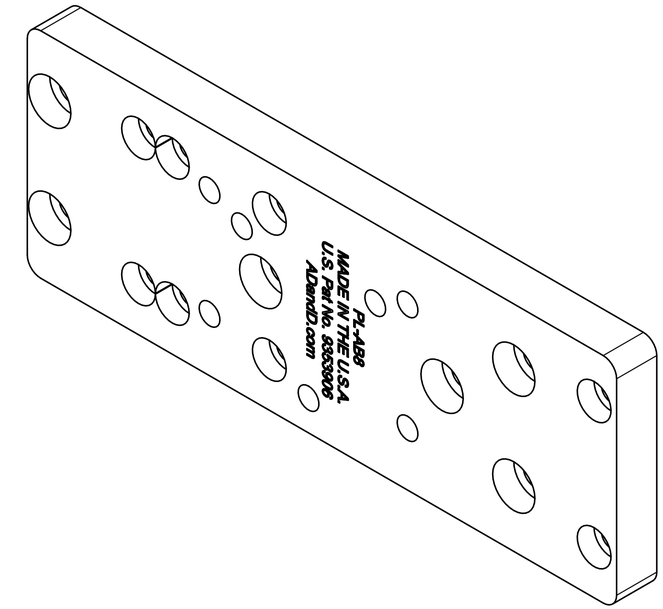

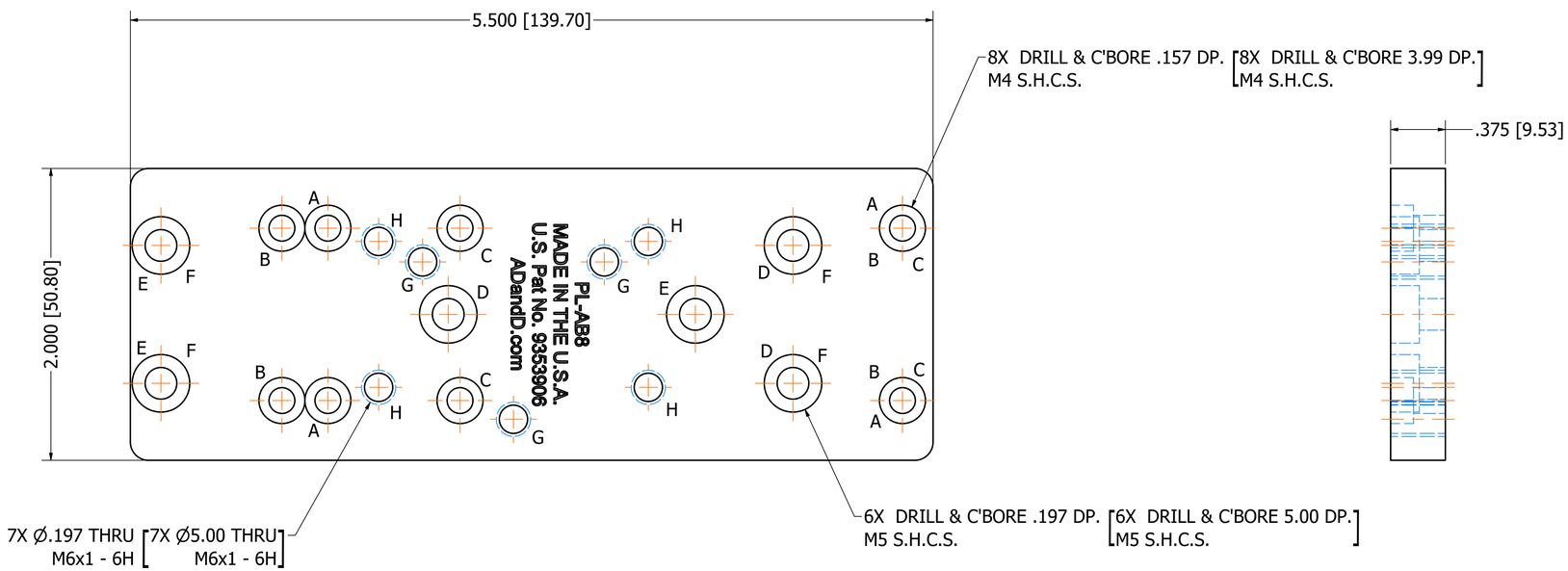

ZONE	REV	DESCRIPTION	DATE	APPROVED BY
	A	RELEASED TO PRODUCTION	3/6/2020	S. RILEY

REVISIONS

PATENT PENDING

BREAK ALL SHARP EDGES AND REMOVE ALL BURRS UNLESS OTHERWISE SPECIFIED

MARK DETAILS WITH P/N, MATERIAL & HEAT TREAT SPEC UNLESS OTHERWISE SPECIFIED

ALL WEIGHTS ARE ESTIMATED AND SHOULD NOT BE USED IN LOADING CALCULATIONS

STANDARD TOLERANCE
UNLESS OTHERWISE SPECIFIED

2 PLACE DEC. ± .030
3 PLACE DEC. ± .005
4 PLACE DEC. ±.0005
ANGLES ± 1°

THIRD ANGLE PROJECTION

GEOMETRIC CHARACTERISTIC SYMBOLS
PER ASME Y14.5M - 1994

FLATNESS
STRAIGHTNESS
CIRCULARITY
CYLINDRICITY
PROFILE OF A SURFACE
PERPENDICULARITY
PARALLELISM
ANGULARITY
CIRC RUNOUT
TOTAL RUNOUT
POSITION
CONCENTRICITY
DIAMETER
AT MAX MATL CONDITION
REGARDLESS OF FEATURE SIZE
AT LEAST MATL CONDITION
-A- DATUM FEATURE

ADandD.com Pop-Link® Mounting Systems

PL ADAPTER BRACKET AB8

MATERIAL:	DESIGNED BY:S. RILEY
FINISH:	DRAWN BY: S. RILEY
WT.(LBS): 0.363 lbmass	DRAWN DATE: 5/28/2020
SHEET. SIZE: D	SCALE: 2 / 1
DETAIL NO. PL-AB8	REV. A

APPLICABLE PRODUCTS		
PRODUCT NAME	RECOMMENDED HARDWARE (INCLUDED)	BOLT PATTERN
LMI #GOCATOR 2130/2330	(4) S.H.C.S - M5-0.8mm X 16mm 18-8SS	C
LMI #GOCATOR 2410	(3) S.H.C.S. - M4-0.7mm X 8mm 18-8SS	A
LMI #GOCATOR 2420	(3) S.H.C.S. - M4-0.7mm X 8mm 18-8SS	A
LMI #GOCATOR 2430	(3) S.H.C.S. - M4-0.7mm X 8mm 18-8SS	B
AD&D #HDPL-BALLBASE	(4) S.H.C.S - M6-1.0mm X 16mm 18-8SS	D
AD&D #PL-BALLBASE	(3) S.H.C.S - M6-1.0mm X 10mm 18-8SS	E

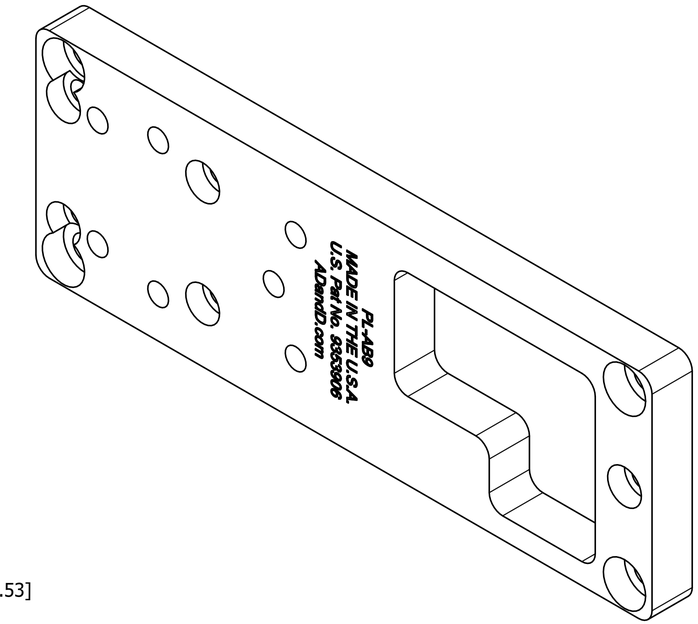

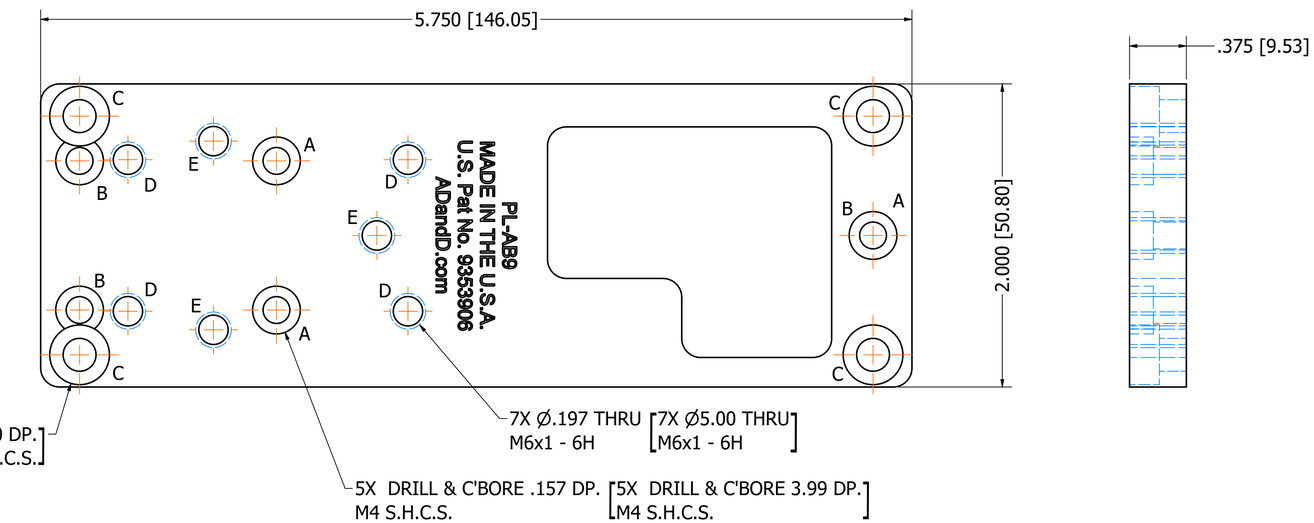

ZONE	REV	DESCRIPTION	DATE	APPROVED BY
	A	RELEASED TO PRODUCTION	3/6/2020	S. RILEY

REVISIONS

PATENT PENDING

BREAK ALL SHARP EDGES AND REMOVE ALL BURRS UNLESS OTHERWISE SPECIFIED

MARK DETAILS WITH P/N, MATERIAL & HEAT TREAT SPEC UNLESS OTHERWISE SPECIFIED

ALL WEIGHTS ARE ESTIMATED AND SHOULD NOT BE USED IN LOADING CALCULATIONS

STANDARD TOLERANCE
UNLESS OTHERWISE SPECIFIED

2 PLACE DEC. ± .030
3 PLACE DEC. ± .005
4 PLACE DEC. ±.0005
ANGLES ± 1˚

THIRD ANGLE PROJECTION

GEOMETRIC CHARACTERISTIC SYMBOLS
PER ASME Y14.5M - 1994

FLATNESS
STRAIGHTNESS
CIRCULARITY
CYLINDRICITY
PROFILE OF A SURFACE
PERPENDICULARITY
PARALLELISM
ANGULARITY
CIRC RUNOUT
TOTAL RUNOUT
POSITION
CONCENTRICITY
DIAMETER
AT MAX MATL CONDITION
REGARDLESS OF FEATURE SIZE
AT LEAST MATL CONDITION
DATUM FEATURE

ADandD.com Pop-Link® Mounting Systems

PL ADAPTER BRACKET AB9

MATERIAL:	DESIGNED BY:S. RILEY
FINISH:	DRAWN BY: S. RILEY
WT.(LBS): 0.305 lbmass	DRAWN DATE: 5/28/2020
SHEET. SIZE: D	SCALE: 2 / 1
DETAIL NO. PL-AB9	REV. A

APPLICABLE PRODUCTS		
PRODUCT NAME	RECOMMENDED HARDWARE (INCLUDED)	BOLT PATTERN
LMI #GOCATOR 2140 / 2340	(4) S.H.C.S. - M5-0.8mm X 18mm 18-8SS	A
LMI #GOCATOR 2440	(3) S.H.C.S. - M4-0.7mm X 16mm 18-8SS	B
LMI #GOCATOR 3210	(4) S.H.C.S. - M5-0.8mm X 16mm 18-8SS	C
LMI #GOCATOR 3504	(4) S.H.C.S. - M5-0.8mm X 16mm 18-8SS	D
LMI #GOCATOR 3506	(4) S.H.C.S. - M5-0.8mm X 16mm 18-8SS	E
AD&D #HDPL-BALLBASE	(4) S.H.C.S. - M6-1.0mm X 16mm 18-8SS	F
AD&D #PL-BALLBASE	(3) S.H.C.S. - M6-1.0mm X 10mm 18-8SS	G

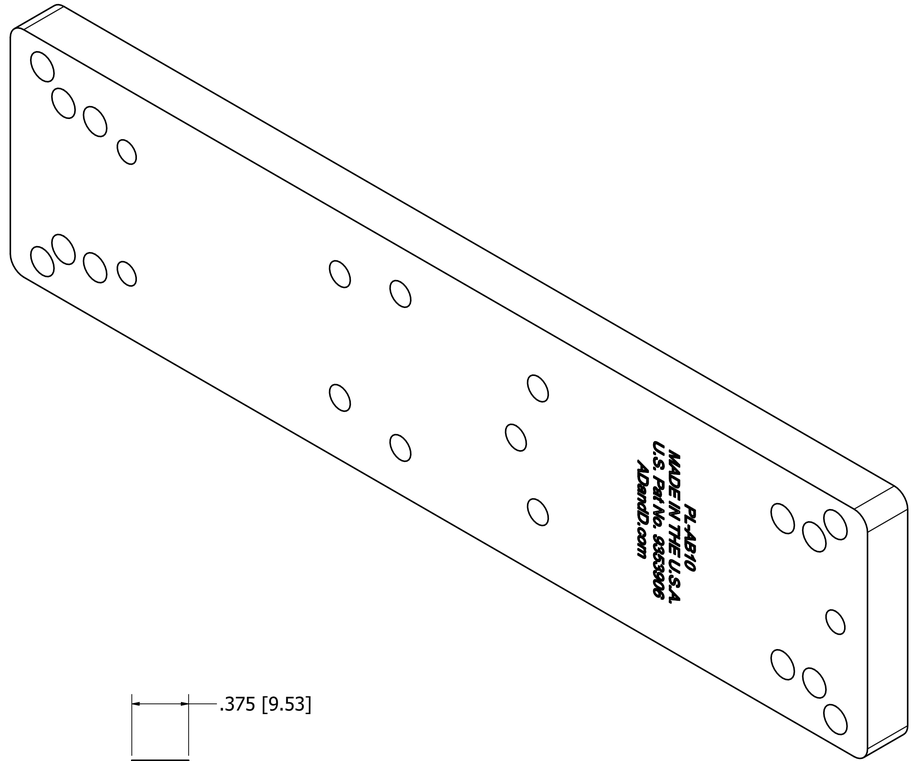

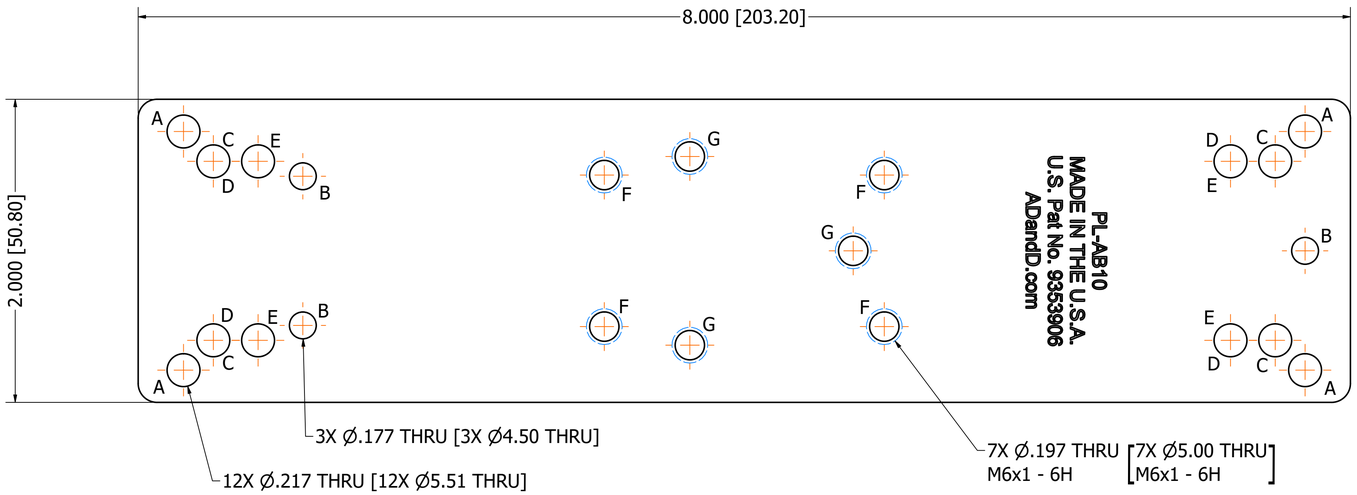

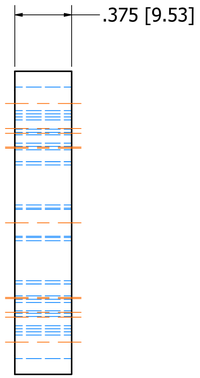

ZONE	REV	DESCRIPTION	DATE	APPROVED BY
	A	RELEASED TO PRODUCTION	3/6/2020	S. RILEY

REVISIONS

PATENT PENDING

BREAK ALL SHARP EDGES AND REMOVE ALL BURRS UNLESS OTHERWISE SPECIFIED

MARK DETAILS WITH P/N, MATERIAL & HEAT TREAT SPEC UNLESS OTHERWISE SPECIFIED

ALL WEIGHTS ARE ESTIMATED AND SHOULD NOT BE USED IN LOADING CALCULATIONS

STANDARD TOLERANCE
UNLESS OTHERWISE SPECIFIED

2 PLACE DEC. ± .030
3 PLACE DEC. ± .005
4 PLACE DEC. ±.0005
ANGLES ± 1°

THIRD ANGLE PROJECTION

GEOMETRIC CHARACTERISTIC SYMBOLS
PER ASME Y14.5M - 1994

FLATNESS
STRAIGHTNESS
CIRCULARITY
CYLINDRICITY
PROFILE OF A SURFACE
PERPENDICULARITY
PARALLELISM
ANGULARITY
CIRC RUNOUT
TOTAL RUNOUT
POSITION
CONCENTRICITY
DIAMETER
AT MAX MATL CONDITION
REGARDLESS OF FEATURE SIZE
AT LEAST MATL CONDITION
DATUM FEATURE

ADandD.com Pop-Link® Mounting Systems

PL ADAPTER BRACKET AB10

MATERIAL:	DESIGNED BY:S. RILEY
FINISH:	DRAWN BY: S. RILEY
WT.(LBS): 0.558 lbmass	DRAWN DATE: 5/29/2020
SHEET. SIZE: D	SCALE: 2 / 1
DETAIL NO. PL-AB10	REV. A

APPLICABLE PRODUCTS		
PRODUCT NAME	RECOMMENDED HARDWARE (INCLUDED)	BOLT PATTERN
LMI #GOCATOR 2150 / 2350	(4) S.H.C.S. - M5-0.8mm X 18mm 18-8SS	A
LMI #GOCATOR 2170 / 2370	(4) S.H.C.S. - M5-0.8mm X 18mm 18-8SS	A
LMI #GOCATOR 2175 / 2375	(4) S.H.C.S. - M5-0.8mm X 18mm 18-8SS	A
LMI #GOCATOR 2180 / 2380	(4) S.H.C.S. - M5-0.8mm X 18mm 18-8SS	A
LMI #GOCATOR 2490	(4) S.H.C.S. - M5-0.8mm X 18mm 18-8SS	A
AD&D #HDPL-BALLBASE	(4) S.H.C.S. - M6-1.0mm X 16mm 18-8SS	B
AD&D #PL-BALLBASE	(3) S.H.C.S. - M6-1.0mm X 10mm 18-8SS	C

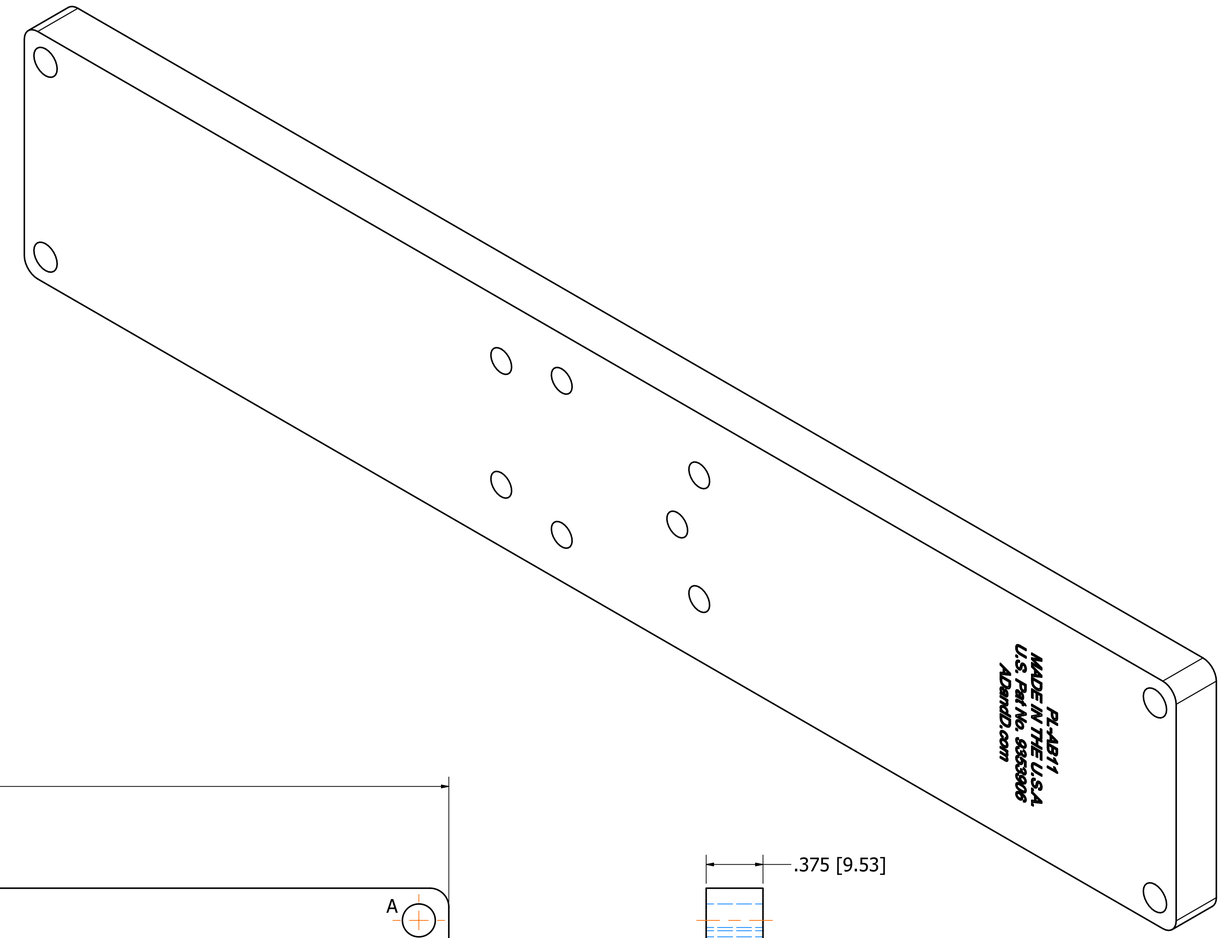

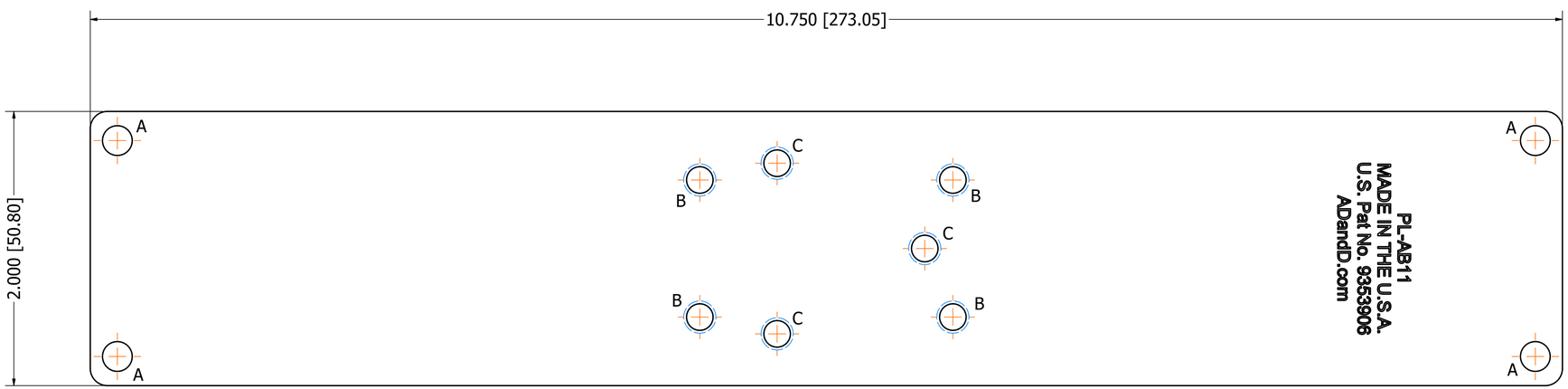

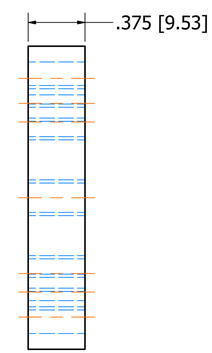

ZONE	REV	DESCRIPTION	DATE	APPROVED BY
	A	RELEASED TO PRODUCTION	3/6/2020	S. RILEY

REVISIONS

PATENT PENDING

BREAK ALL SHARP EDGES AND REMOVE ALL BURRS UNLESS OTHERWISE SPECIFIED

MARK DETAILS WITH P/N, MATERIAL & HEAT TREAT SPEC UNLESS OTHERWISE SPECIFIED

ALL WEIGHTS ARE ESTIMATED AND SHOULD NOT BE USED IN LOADING CALCULATIONS

STANDARD TOLERANCE
UNLESS OTHERWISE SPECIFIED

2 PLACE DEC. ± .030
3 PLACE DEC. ± .005
4 PLACE DEC. ±.0005
ANGLES ± 1°

THIRD ANGLE PROJECTION

GEOMETRIC CHARACTERISTIC SYMBOLS
PER ASME Y14.5M - 1994

	FLATNESS		CIRC RUNOUT
	STRAIGHTNESS		TOTAL RUNOUT
	CIRCULARITY		POSITION
	CYLINDRICITY		CONCENTRICITY
	PROFILE OF A SURFACE	Ø	DIAMETER
	PERPENDICULARITY	Ⓜ	AT MAX MATL CONDITION
	PARALLELISM	Ⓢ	REGARDLESS OF FEATURE SIZE
	ANGULARITY	Ⓛ	AT LEAST MATL CONDITION
		-A-	DATUM FEATURE

ADandD.com Pop-Link® Mounting Systems

PL ADAPTER BRACKET AB11

MATERIAL:		DESIGNED BY:S. RILEY
FINISH:		DRAWN BY: S. RILEY
WT.(LBS): 0.773 lbmass		DRAWN DATE: 5/29/2020
	SHEET. SIZE: D	SCALE: 2 / 1
DETAIL NO. PL-AB11		REV. A

APPLICABLE PRODUCTS		
PRODUCT NAME	RECOMMENDED HARDWARE (INCLUDED)	BOLT PATTERN
COGNEX # DS910B	(3) S.H.C.S. - M5-0.8mm X 45mm 18-8SS (3) JAM NUT - M5-0.8mm 18-8SS	A
COGNEX #DS925B	(3) S.H.C.S. - M5-0.8mm X 45mm 18-8SS (3) JAM NUT - M5-0.8mm 18-8SS	A
MICRO EPSILON SCAN CONTROL 25XX_26XX_29XX	(3) S.H.C.S. - M5-0.8mm X 45mm 18-8SS (3) JAM NUT - M5-0.8mm 18-8SS	A
AD&D #HDPL-BALLBASE	(3) JAM NUT - M5-0.8mm 18-8SS	B
AD&D #PL-BALLBASE	(3) S.H.C.S. - M6-1.0mm X 10mm 18-8SS	C

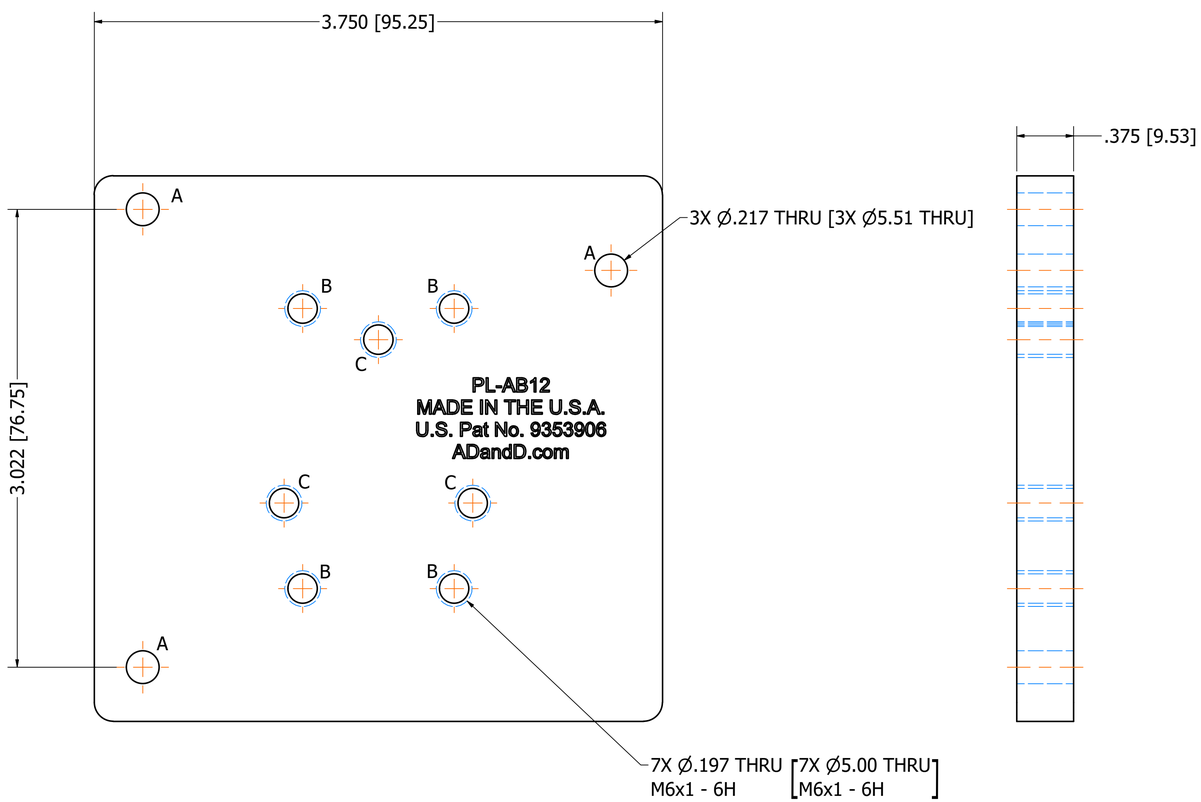

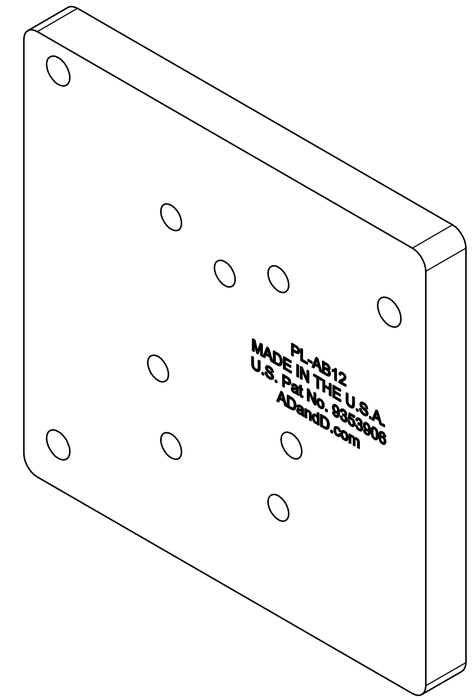

ZONE	REV	DESCRIPTION	DATE	APPROVED BY
	A	RELEASED TO PRODUCTION	3/6/2020	S. RILEY

REVISIONS

PATENT PENDING

BREAK ALL SHARP EDGES AND REMOVE ALL BURRS UNLESS OTHERWISE SPECIFIED

MARK DETAILS WITH P/N, MATERIAL & HEAT TREAT SPEC UNLESS OTHERWISE SPECIFIED

ALL WEIGHTS ARE ESTIMATED AND SHOULD NOT BE USED IN LOADING CALCULATIONS

STANDARD TOLERANCE
UNLESS OTHERWISE SPECIFIED

2 PLACE DEC. ± .030
3 PLACE DEC. ± .005
4 PLACE DEC. ±.0005
ANGLES ± 1°

THIRD ANGLE PROJECTION

GEOMETRIC CHARACTERISTIC SYMBOLS
PER ASME Y14.5M - 1994

	FLATNESS		CIRC RUNOUT
	STRAIGHTNESS		TOTAL RUNOUT
	CIRCULARITY		POSITION
	CYLINDRICITY		CONCENTRICITY
	PROFILE OF A SURFACE	Ø	DIAMETER
	PERPENDICULARITY	Ⓜ	AT MAX MATL CONDITION
	PARALLELISM	Ⓢ	REGARDLESS OF FEATURE SIZE
	ANGULARITY	Ⓛ	AT LEAST MATL CONDITION
		-A-	DATUM FEATURE

ADandD.com Pop-Link® Mounting Systems

PL ADAPTER BRACKET AB12

MATERIAL:	DESIGNED BY:S. RILEY
FINISH:	DRAWN BY: S. RILEY
WT.(LBS): 0.482 lbmass	DRAWN DATE: 5/29/2020
SHEET. SIZE: D	SCALE: 2 / 1
DETAIL NO. PL-AB12	REV. A

APPLICABLE PRODUCTS		
PRODUCT NAME	RECOMMENDED HARDWARE (INCLUDED)	BOLT PATTERN
COGNEX #DSMAX	(3) S.H.C.S. - M5-0.8mm X 16mm 18-8SS	A,B
MICRO EPSILON OPTO NCDT 1750_1750DR_2300	(3) S.H.C.S. - M4-1.0mm X 45mm 18-8SS (3) JAM NUT - M4-0.8mm 18-8SS	E
AD&D #HDPL-BALLBASE	(4) S.H.C.S. - M6-1.0mm X 16mm 18-8SS	C
AD&D #PL-BALLBASE	(3) S.H.C.S. - M6-1.0mm X 10mm 18-8SS	D

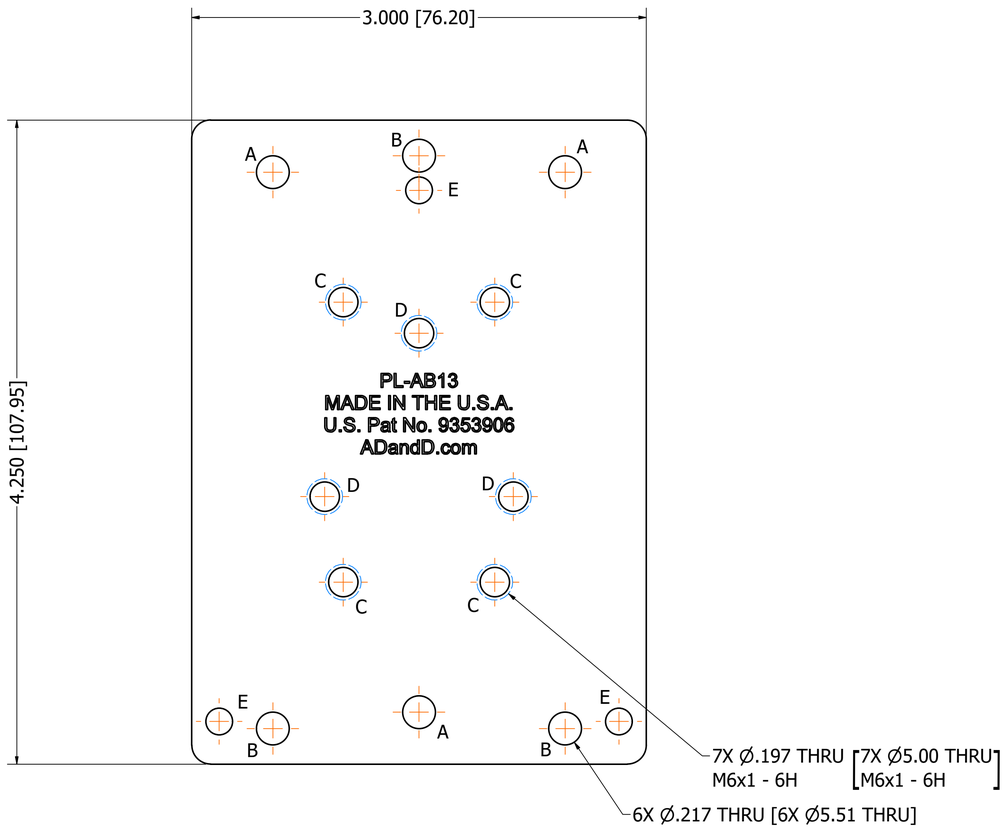

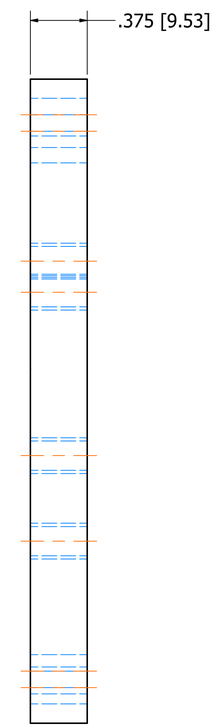

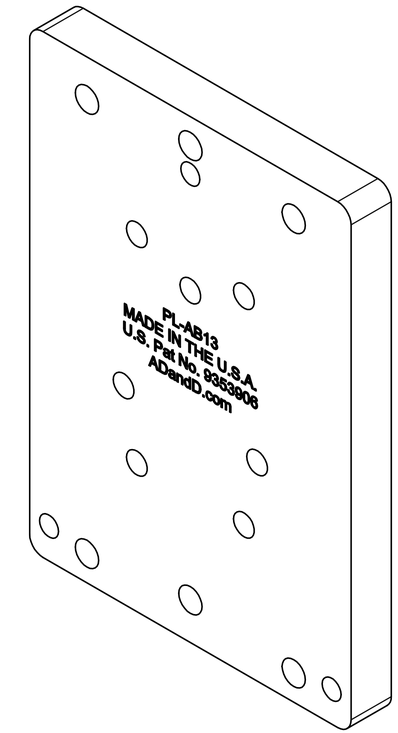

ZONE	REV	DESCRIPTION	DATE	APPROVED BY
	A	RELEASED TO PRODUCTION	3/6/2020	S. RILEY

REVISIONS

PATENT PENDING

BREAK ALL SHARP EDGES AND REMOVE ALL BURRS UNLESS OTHERWISE SPECIFIED

MARK DETAILS WITH P/N, MATERIAL & HEAT TREAT SPEC UNLESS OTHERWISE SPECIFIED

ALL WEIGHTS ARE ESTIMATED AND SHOULD NOT BE USED IN LOADING CALCULATIONS

STANDARD TOLERANCE
UNLESS OTHERWISE SPECIFIED

2 PLACE DEC. ± .030
3 PLACE DEC. ± .005
4 PLACE DEC. ±.0005
ANGLES ± 1°

THIRD ANGLE PROJECTION

GEOMETRIC CHARACTERISTIC SYMBOLS
PER ASME Y14.5M - 1994

FLATNESS
STRAIGHTNESS
CIRCULARITY
CYLINDRICITY
PROFILE OF A SURFACE
PERPENDICULARITY
PARALLELISM
ANGULARITY
CIRC RUNOUT
TOTAL RUNOUT
POSITION
CONCENTRICITY
DIAMETER
AT MAX MATL CONDITION
REGARDLESS OF FEATURE SIZE
AT LEAST MATL CONDITION
-A- DATUM FEATURE

ADandD.com Pop-Link® Mounting Systems

PL ADAPTER BRACKET AB13

MATERIAL:	DESIGNED BY:S. RILEY
FINISH:	DRAWN BY: S. RILEY
WT.(LBS): 0.448 lbmass	DRAWN DATE: 5/29/2020
SHEET. SIZE: D	SCALE: 2 / 1
DETAIL NO. PL-AB13	REV. A

APPLICABLE PRODUCTS		
PRODUCT NAME	RECOMMENDED HARDWARE (INCLUDED)	BOLT PATTERN
COGNEX INSIGHT 5000 SERIES CAMERA	(4) S.H.C.S. - M4-0.7mm X 8mm 18-8SS	A
COGNEX INSIGHT 9000 SERIES CAMERA	(4) S.H.C.S. - M4-0.7mm X 8mm 18-8SS	A
COGNEX INSIGHT D900 SERIES CAMERA	(4) S.H.C.S. - M4-0.7mm X 8mm 18-8SS	A
COGNEX DM500 SERIES READER	(4) S.H.C.S. - M3-0.5mm X 6mm 18-8SS	B
BANNER VE SERIES CAMERA	(4) S.H.C.S. - M3-0.5mm X 6mm 18-8SS	C

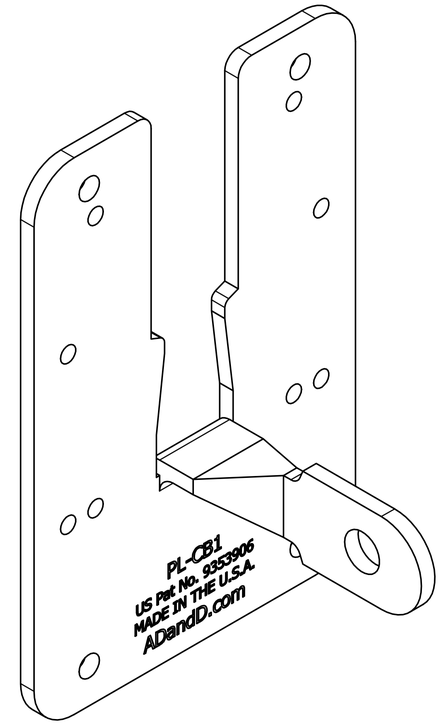

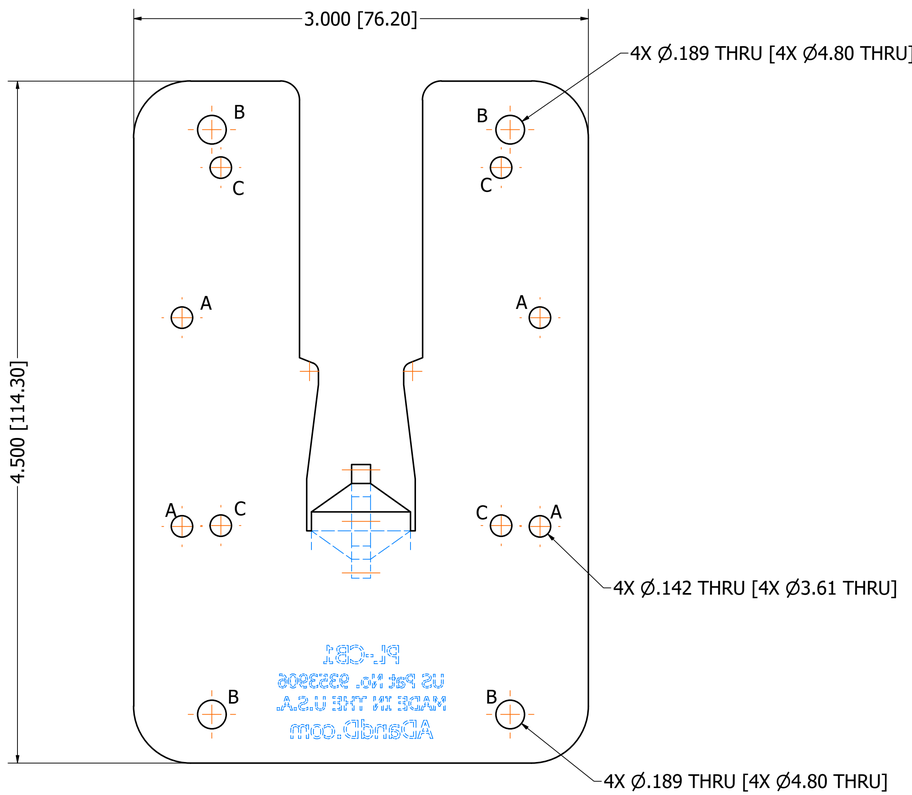

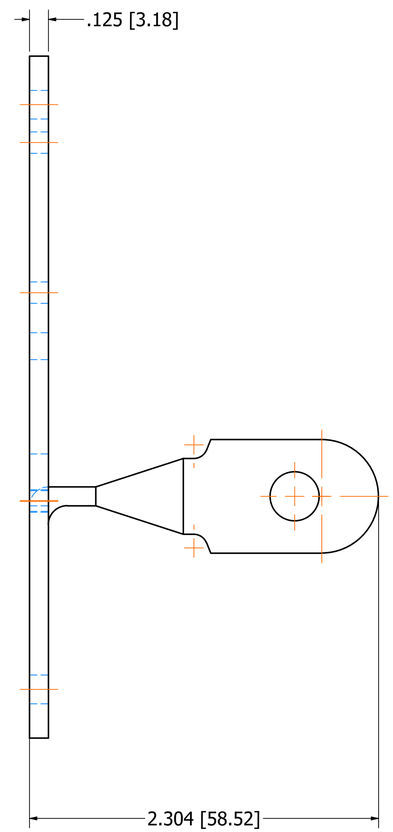

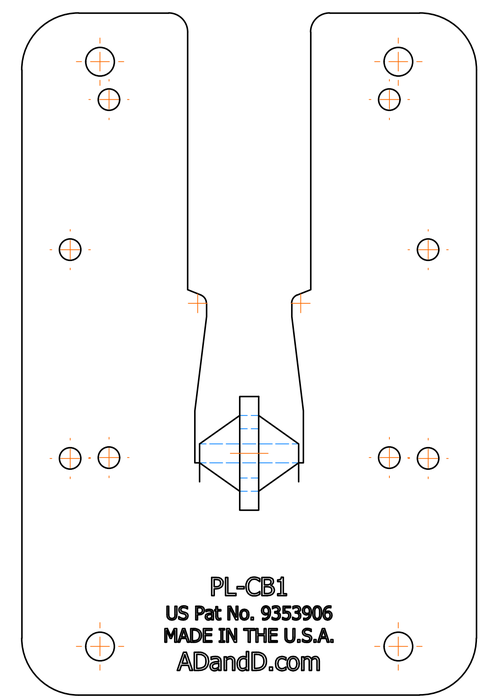

ZONE	REV	DESCRIPTION	DATE	APPROVED BY
	A	RELEASED TO PRODUCTION	3/6/2020	S. RILEY

REVISIONS

PATENT PENDING

BREAK ALL SHARP EDGES AND REMOVE ALL BURRS UNLESS OTHERWISE SPECIFIED

MARK DETAILS WITH P/N, MATERIAL & HEAT TREAT SPEC UNLESS OTHERWISE SPECIFIED

ALL WEIGHTS ARE ESTIMATED AND SHOULD NOT BE USED IN LOADING CALCULATIONS

STANDARD TOLERANCE UNLESS OTHERWISE SPECIFIED	
2 PLACE DEC.	± .030
3 PLACE DEC.	± .005
4 PLACE DEC.	±.0005
ANGLES	± 1°

THIRD ANGLE PROJECTION

GEOMETRIC CHARACTERISTIC SYMBOLS PER ASME Y14.5M - 1994

	FLATNESS		CIRC RUNOUT
	STRAIGHTNESS		TOTAL RUNOUT
	CIRCULARITY		POSITION
	CYLINDRICITY		CONCENTRICITY
	PROFILE OF A SURFACE	Ø	DIAMETER
	PERPENDICULARITY	Ⓜ	AT MAX MATL CONDITION
	PARALLELISM	Ⓢ	REGARDLESS OF FEATURE SIZE
	ANGULARITY	Ⓛ	AT LEAST MATL CONDITION
		-A-	DATUM FEATURE

ADandD.com Pop-Link® Mounting Systems

POP-LINK CAMERA BRACKET 1

MATERIAL:	DESIGNED BY:jsmith
FINISH:	DRAWN BY: S. RILEY
WT.(LBS): 0.450 lbmass	DRAWN DATE: 5/8/2020
SHEET. SIZE: D	SCALE: 2 / 1
DETAIL NO. PL-CB1	REV. A

APPLICABLE PRODUCTS		
PRODUCT NAME	RECOMMENDED HARDWARE (INCLUDED)	BOLT PATTERN
Cognex Insight 7000 Series Camera	(4) S.H.C.S - M3-0.5mm X 6mm 18-8SS	A
Flir Ax5 Series Camera (D)	(4) S.H.C.S - M3-0.5mm X 6mm 18-8SS	G
IFM O3D3xx Sensor (C)	(2) S.H.C.S. - M5-0.8mm X 80mm 18-8SS (2) JAM NUT - M5-0.8mm 18-8SS	F
Keyence IV Vision Sensor	(2) S.H.C.S. - M4-0.7mm X 8mm 18-8SS	B
Keyence SR-D100 Reader	(4) S.H.C.S - M3-0.5mm X 6mm 18-8SS	C
Keyence SR-500 Reader	(3) S.H.C.S - M3-0.5mm X 6mm 18-8SS	D
Keyence SR-750 Reader	(4) S.H.C.S. - M4-0.7mm X 8mm 18-8SS	E
Keyence SR-1000 Reader (B)	(4) S.H.C.S. - M4-0.7mm X 8mm 18-8SS	E
Keyence SR-2000 Reader	(4) S.H.C.S. - M4-0.7mm X 8mm 18-8SS	E

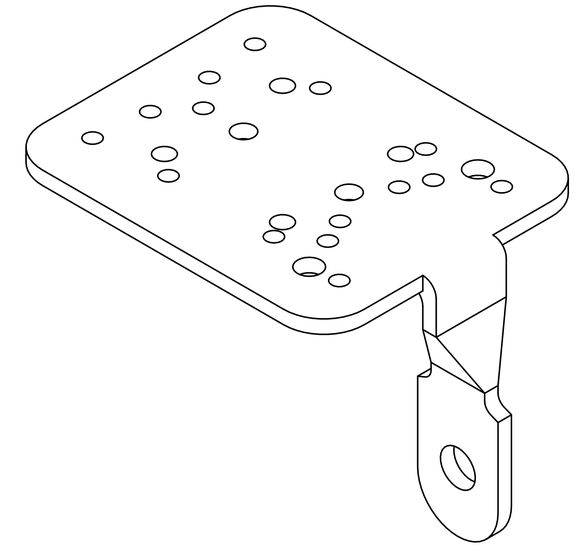

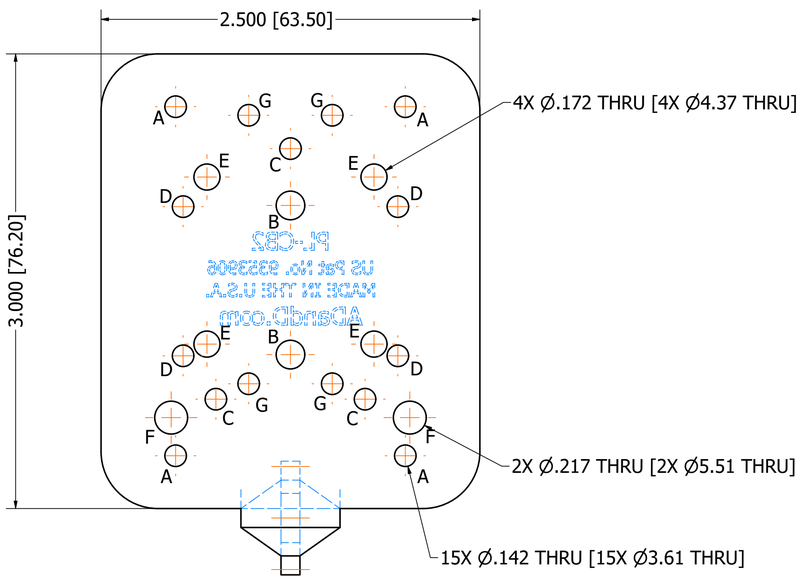

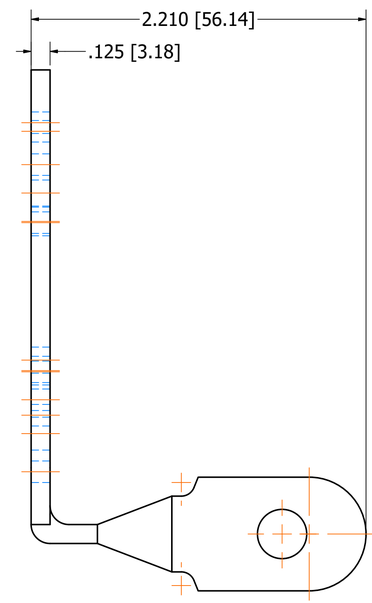

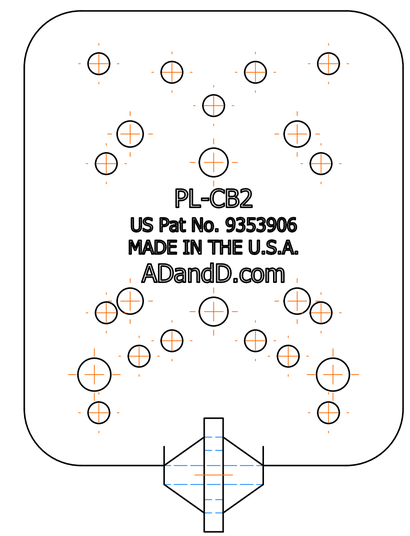

ZONE	REV	DESCRIPTION	DATE	APPROVED BY
	D	ADDED FLIR Ax5 SERIES CAMERA	3/05/2020	S. RILEY
	C	ADDED IFM O3D3xx SENSOR	8/01/2018	S. RILEY
	B	ADDED KEYENCE SR-1000 READER	3/30/2017	S. RILEY
	A	RELEASED TO PRODUCTION		S. RILEY

REVISIONS

PATENT PENDING

BREAK ALL SHARP EDGES AND REMOVE ALL BURRS UNLESS OTHERWISE SPECIFIED

MARK DETAILS WITH P/N, MATERIAL & HEAT TREAT SPEC UNLESS OTHERWISE SPECIFIED

ALL WEIGHTS ARE ESTIMATED AND SHOULD NOT BE USED IN LOADING CALCULATIONS

STANDARD TOLERANCE
UNLESS OTHERWISE SPECIFIED

2 PLACE DEC. ± .030
3 PLACE DEC. ± .005
4 PLACE DEC. ±.0005
ANGLES ± 1°

THIRD ANGLE PROJECTION

GEOMETRIC CHARACTERISTIC SYMBOLS
PER ASME Y14.5M - 1994

	FLATNESS		CIRC RUNOUT
	STRAIGHTNESS		TOTAL RUNOUT
	CIRCULARITY		POSITION
	CYLINDRICITY		CONCENTRICITY
	PROFILE OF A SURFACE	Ø	DIAMETER
	PERPENDICULARITY	Ⓜ	AT MAX MATL CONDITION
	PARALLELISM	Ⓢ	REGARDLESS OF FEATURE SIZE
	ANGULARITY	Ⓛ	AT LEAST MATL CONDITION
		-A-	DATUM FEATURE

ADandD.com Pop-Link® Mounting Systems

POP-LINK CAMERA BRACKET 2

MATERIAL:		DESIGNED BY:jsmith
FINISH:		DRAWN BY: S. RILEY
WT.(LBS): 0.303 lbmass		DRAWN DATE: 5/8/2020
	SHEET. SIZE: D	SCALE: 2 / 1
DETAIL NO. PL-CB2		REV. D

APPLICABLE PRODUCTS		
PRODUCT NAME	RECOMMENDED HARDWARE (INCLUDED)	BOLT PATTERN
COGNEX 4G CHECKER CAMERA	(2) S.H.C.S. - M4-0.7mm X 6mm 18-8SS	A
COGNEX DM50 READER	(2) S.H.C.S. - M3-0.5mm X 6mm 18-8SS	B
COGNEX DM60 READER	(2) S.H.C.S. - M3-0.5mm X 6mm 18-8SS	B
COGNEX DM200 READER	(2) S.H.C.S. - M3-0.5mm X 6mm 18-8SS	C
COGNEX DM300 READER	(4) S.H.C.S. - M3-0.5mm X 6mm 18-8SS	D
COGNEX INSIGHT 2000 (RIGHT ANGLE CONFIG.)	(2) S.H.C.S. - M3-0.5mm X 6mm 18-8SS	D
COGNEX INSIGHT 2000 (IN-LINE CONFIG.)	(2) S.H.C.S. - M3-0.5mm X 6mm 18-8SS	G
COGNEX MICRO SERIES	(2) S.H.C.S. - M3-0.5mm X 6mm 18-8SS	E
COGNEX DATAMAN 150/260	(2) S.H.C.S. - M3-0.5mm X 6mm 18-8SS	D
COGNEX DATAMAN 150/260 (RIGHT ANGLE CONFIG.)	(4) S.H.C.S. - M3-0.5mm X 6mm 18-8SS	G
COGNEX DATAMAN 70	(2) S.H.C.S. - M3-0.5mm X 30mm 18-8SS (2) JAM NUT - M3-0.5mm 18-8SS	C
HONEYWELL VUQUEST 3310G	(2) S.H.C.S. - M3-0.5mm X 6mm 18-8SS	F
HONEYWELL VUQUEST 3320G	(2) S.H.C.S. - M3-0.5mm X 6mm 18-8SS	F
HONEYWELL VUQUEST 3330G	(2) S.H.C.S. - M3-0.5mm X 6mm 18-8SS	F
IDS-UI 3040	(4) S.H.C.S. - M3-0.5mm X 6mm 18-8SS	H
SENSOPART V10 SERIES	(2) S.H.C.S. - M3-0.5mm X 6mm 18-8SS	A
SENSOPART V20 SERIES	(2) S.H.C.S. - M4-0.7mm X 6mm 18-8SS	A

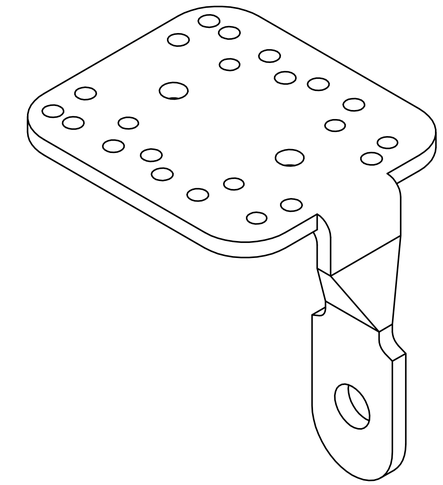

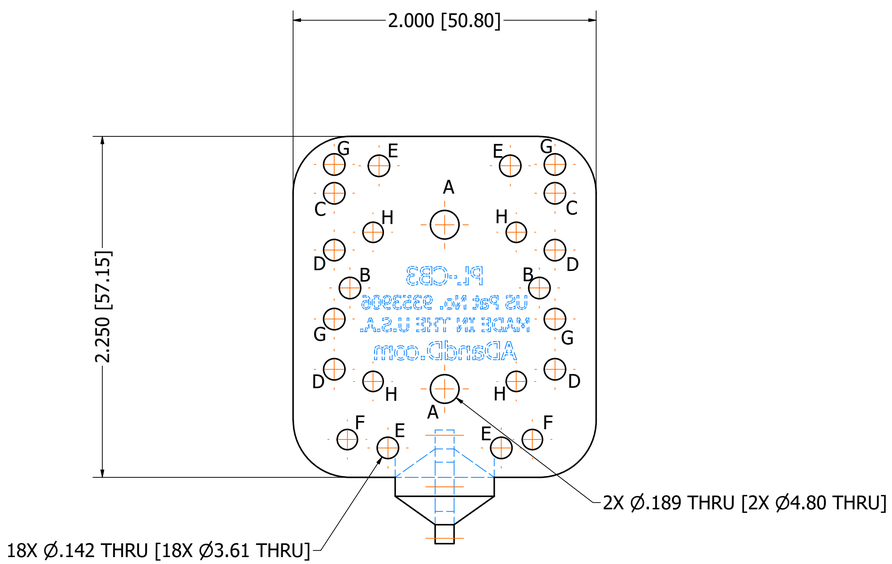

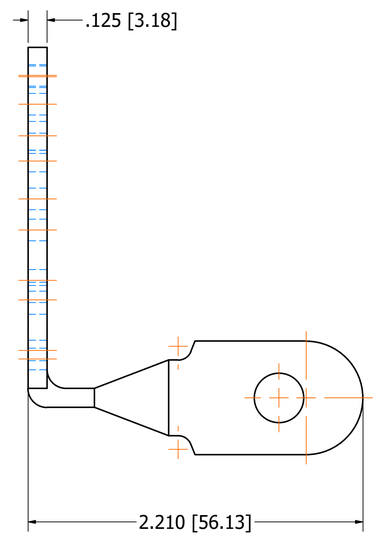

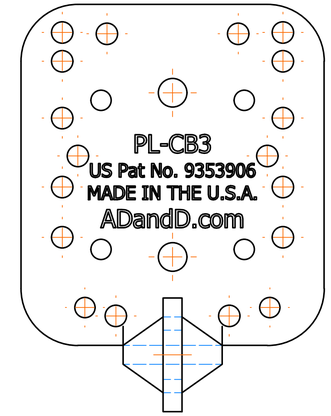

ZONE	REV	DESCRIPTION	DATE	APPROVED BY
	A	RELEASED TO PRODUCTION	3/6/2020	S. RILEY

REVISIONS

PATENT PENDING

BREAK ALL SHARP EDGES AND REMOVE ALL BURRS UNLESS OTHERWISE SPECIFIED

MARK DETAILS WITH P/N, MATERIAL & HEAT TREAT SPEC UNLESS OTHERWISE SPECIFIED

ALL WEIGHTS ARE ESTIMATED AND SHOULD NOT BE USED IN LOADING CALCULATIONS

STANDARD TOLERANCE
UNLESS OTHERWISE SPECIFIED

2 PLACE DEC. ± .030
3 PLACE DEC. ± .005
4 PLACE DEC. ±.0005
ANGLES ± 1°

THIRD ANGLE PROJECTION

GEOMETRIC CHARACTERISTIC SYMBOLS
PER ASME Y14.5M - 1994

FLATNESS	CIRC RUNOUT
STRAIGHTNESS	TOTAL RUNOUT
CIRCULARITY	POSITION
CYLINDRICITY	CONCENTRICITY
PROFILE OF A SURFACE	DIAMETER
PERPENDICULARITY	AT MAX MATL CONDITION
PARALLELISM	REGARDLESS OF FEATURE SIZE
ANGULARITY	AT LEAST MATL CONDITION
	-A- DATUM FEATURE

ADandD.com Pop-Link® Mounting Systems

PL CAMERA BRACKET 3

MATERIAL:		DESIGNED BY:jsmith
FINISH:		DRAWN BY: S. RILEY
WT.(LBS): 0.197 lbmass		DRAWN DATE: 5/8/2020
	SHEET. SIZE: D	SCALE: 2 / 1
DETAIL NO. PL-CB3		REV. A

APPLICABLE PRODUCTS		
PRODUCT NAME	RECOMMENDED HARDWARE (INCLUDED)	BOLT PATTERN
BANNER PRESENCEPLUS4 CAMERA	(2) S.H.C.S. - M6-1.0mm X 16mm 18-8SS POP-LINK (2) JAM NUT - M6-1.0mm 18-8SS POP-LINK	A
KEYENCE #CA-035 M/C CAMERA	(2) S.H.C.S. - M3-0.5mm X 6mm 18-8SS POP-LINK	G
KEYENCE #CA-H035 M/C CAMERA	(2) S.H.C.S. - M3-0.5mm X 6mm 18-8SS POP-LINK	G
KEYENCE #CA-200 M/C CAMERA	(2) S.H.C.S. - M3-0.5mm X 6mm 18-8SS POP-LINK	G
KEYENCE #CA-H200 M/C CAMERA	(2) S.H.C.S. - M3-0.5mm X 6mm 18-8SS POP-LINK	G
KEYENCE #CA-HL02MX CAMERA	(4) S.H.C.S. - M3-0.5mm X 6mm 18-8SS POP-LINK	F
KEYENCE #CA-H2100 M/C CAMERA	(2) S.H.C.S. - M3-0.5mm X 6mm 18-8SS POP-LINK	F
KEYENCE #CV-035 M/C CAMERA	(2) S.H.C.S. - M3-0.5mm X 6mm 18-8SS POP-LINK	G
KEYENCE #CV-H035 M/C CAMERA	(2) S.H.C.S. - M3-0.5mm X 6mm 18-8SS POP-LINK	G
KEYENCE #CV-H100 M/C CAMERA	(2) S.H.C.S. - M3-0.5mm X 6mm 18-8SS POP-LINK	G
KEYENCE #CV-200 M/C CAMERA	(2) S.H.C.S. - M3-0.5mm X 6mm 18-8SS POP-LINK	B
KEYENCE #CV-H200 M/C CAMERA	(2) S.H.C.S. - M3-0.5mm X 6mm 18-8SS POP-LINK	F
KEYENCE #CV-500 M/C CAMERA	(2) S.H.C.S. - M3-0.5mm X 6mm 18-8SS POP-LINK	B
KEYENCE #CV-H500 M/C CAMERA	(2) S.H.C.S. - M3-0.5mm X 6mm 18-8SS POP-LINK	G
KEYENCE SR-600 READER	(2) S.H.C.S. - M3-0.5mm X 6mm 18-8SS POP-LINK	D
KEYENCE #XG-HL02/04/08 CAMERA	(2) S.H.C.S. - M3-0.5mm X 6mm 18-8SS POP-LINK	F
KEYENCE #XG-035 M/C CAMERA	(2) S.H.C.S. - M3-0.5mm X 6mm 18-8SS POP-LINK	B
KEYENCE #XG-H035 M/C CAMERA	(2) S.H.C.S. - M3-0.5mm X 6mm 18-8SS POP-LINK	G
KEYENCE #XG-H100 M/C CAMERA	(2) S.H.C.S. - M3-0.5mm X 6mm 18-8SS POP-LINK	G
KEYENCE #XG-200 M/C CAMERA	(2) S.H.C.S. - M3-0.5mm X 6mm 18-8SS POP-LINK	B
KEYENCE #XG-H200 M/C CAMERA	(2) S.H.C.S. - M3-0.5mm X 6mm 18-8SS POP-LINK	G
KEYENCE #XG-H500 M/C CAMERA	(2) S.H.C.S. - M3-0.5mm X 6mm 18-8SS POP-LINK	G
MICROSCAN MICROHAWK ID-30	(2) S.H.C.S. - M3-0.5mm X 6mm 18-8SS POP-LINK	E
MICROSCAN MICROHAWK ID-40	(2) S.H.C.S. - M3-0.5mm X 6mm 18-8SS POP-LINK	E

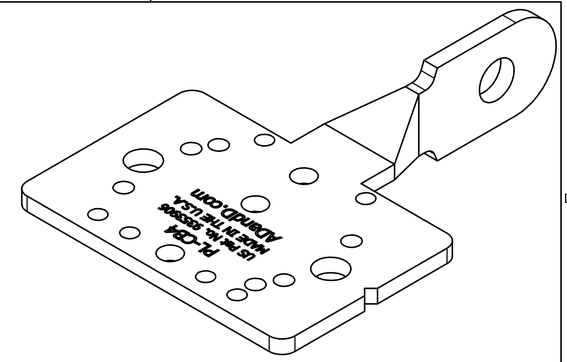

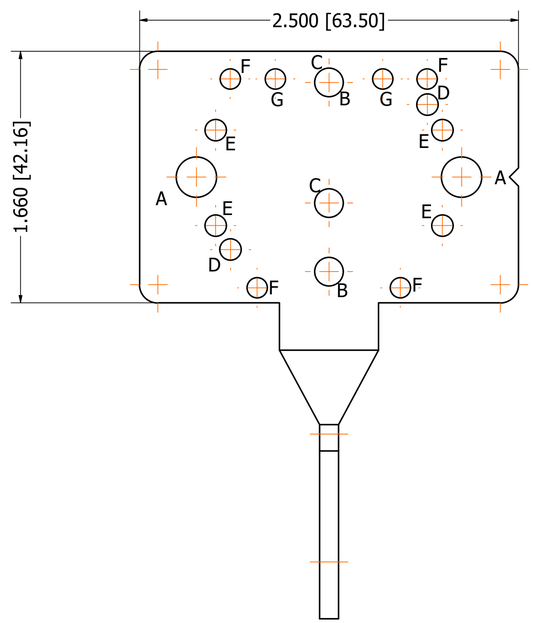

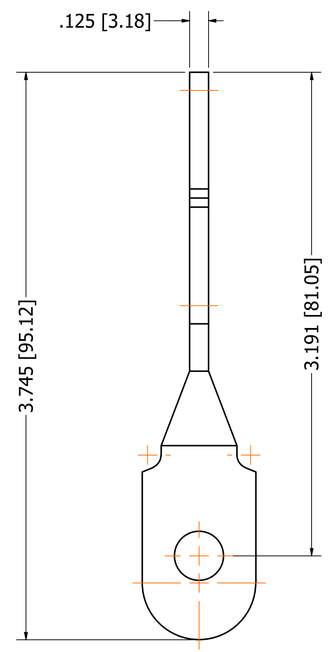

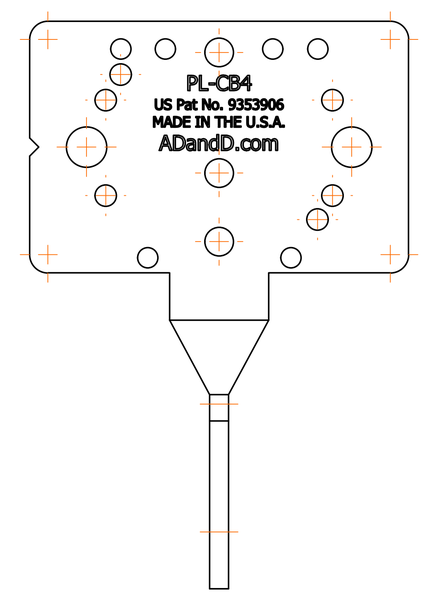

ZONE	REV	DESCRIPTION	DATE	APPROVED BY
	A	RELEASED TO PRODUCTION	3/6/2020	S. RILEY

REVISIONS

PATENT PENDING

BREAK ALL SHARP EDGES AND REMOVE ALL BURRS UNLESS OTHERWISE SPECIFIED

MARK DETAILS WITH P/N, MATERIAL & HEAT TREAT SPEC UNLESS OTHERWISE SPECIFIED

ALL WEIGHTS ARE ESTIMATED AND SHOULD NOT BE USED IN LOADING CALCULATIONS

STANDARD TOLERANCE
UNLESS OTHERWISE SPECIFIED

2 PLACE DEC. ± .030
3 PLACE DEC. ± .005
4 PLACE DEC. ±.0005
ANGLES ± 1°

THIRD ANGLE PROJECTION

GEOMETRIC CHARACTERISTIC SYMBOLS
PER ASME Y14.5M - 1994

FLATNESS
STRAIGHTNESS
CIRCULARITY
CYLINDRICITY
PROFILE OF A SURFACE
PERPENDICULARITY
PARALLELISM
ANGULARITY
CIRC RUNOUT
TOTAL RUNOUT
POSITION
CONCENTRICITY
DIAMETER
AT MAX MATL CONDITION
REGARDLESS OF FEATURE SIZE
AT LEAST MATL CONDITION
-A- DATUM FEATURE

ADandD.com Pop-Link® Mounting Systems

PL CAMERA BRACKET 4

MATERIAL:	DESIGNED BY:jsmith
FINISH:	DRAWN BY: S. RILEY
WT.(LBS): 0.186 lbmass	DRAWN DATE: 5/8/2020
SHEET. SIZE: D	SCALE: 2 / 1
DETAIL NO. PL-CB4	REV. A

APPLICABLE PRODUCTS		
PRODUCT NAME	RECOMMENDED HARDWARE (INCLUDED)	BOLT PATTERN
COGNEX 8402M	(4) S.H.C.S. - M3-0.5mm X 6mm 18-8SS	A
COGNEX INSIGHT 1403	(4) S.H.C.S. - M3-0.5mm X 6mm 18-8SS	B
KEYENCE CA-HX048C	(4) S.H.C.S. - M3-0.5mm X 6mm 18-8SS	C
KEYENCE CA-HX200C/M	(4) S.H.C.S. - M3-0.5mm X 6mm 18-8SS	D
KEYENCE CA-HX500C/M	(4) S.H.C.S. - M3-0.5mm X 6mm 18-8SS	D
IFM O2I5XX SERIES	(2) S.H.C.S. - M4-0.7mm X 6mm 18-8SS	A (TOP SET OF HOLES)

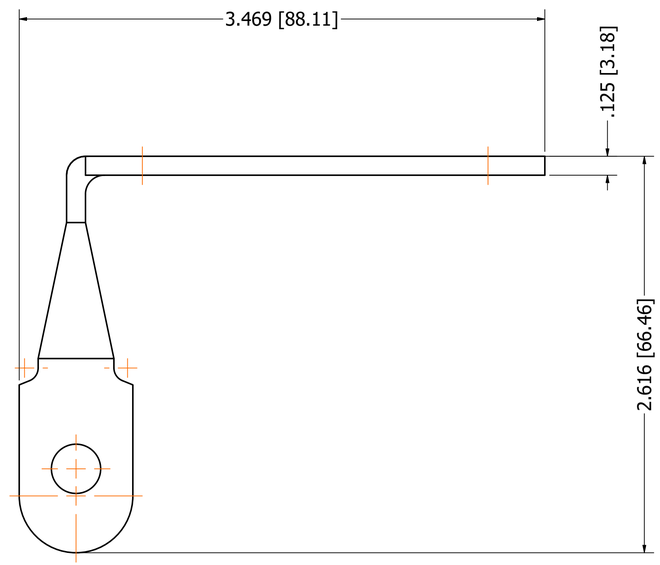

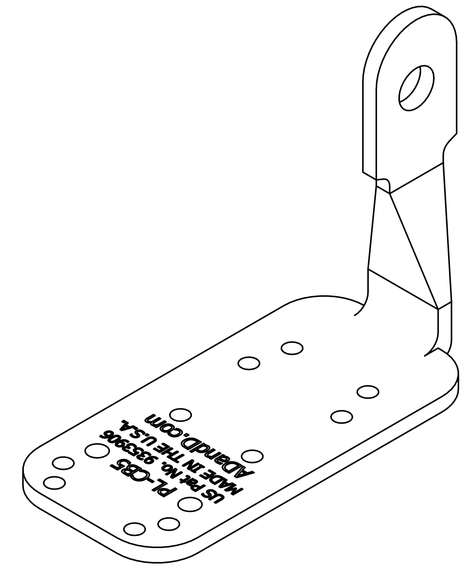

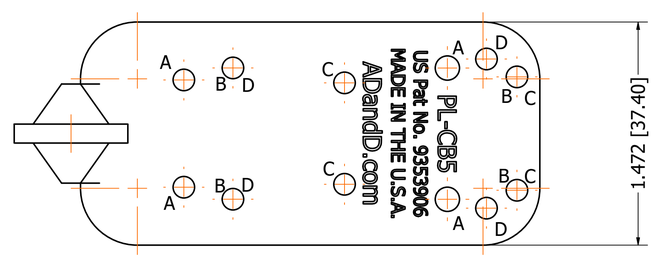

ZONE	REV	DESCRIPTION	DATE	APPROVED BY
	A	RELEASED TO PRODUCTION	3/6/2020	S. RILEY

REVISIONS

PATENT PENDING

BREAK ALL SHARP EDGES AND REMOVE ALL BURRS UNLESS OTHERWISE SPECIFIED

MARK DETAILS WITH P/N, MATERIAL & HEAT TREAT SPEC UNLESS OTHERWISE SPECIFIED

ALL WEIGHTS ARE ESTIMATED AND SHOULD NOT BE USED IN LOADING CALCULATIONS

STANDARD TOLERANCE
UNLESS OTHERWISE SPECIFIED

2 PLACE DEC. ± .030
3 PLACE DEC. ± .005
4 PLACE DEC. ±.0005
ANGLES ± 1°

THIRD ANGLE PROJECTION

GEOMETRIC CHARACTERISTIC SYMBOLS
PER ASME Y14.5M - 1994

FLATNESS
STRAIGHTNESS
CIRCULARITY
CYLINDRICITY
PROFILE OF A SURFACE
PERPENDICULARITY
PARALLELISM
ANGULARITY
CIRC RUNOUT
TOTAL RUNOUT
POSITION
CONCENTRICITY
DIAMETER
AT MAX MATL CONDITION
REGARDLESS OF FEATURE SIZE
AT LEAST MATL CONDITION
-A- DATUM FEATURE

ADandD.com Pop-Link® Mounting Systems

PL CAMERA BRACKET 5

MATERIAL:	DESIGNED BY:D. BIDDINGER
FINISH:	DRAWN BY: S. RILEY
WT.(LBS): 0.215 lbmass	DRAWN DATE: 5/11/2020
SHEET. SIZE: D	SCALE: 2 / 1
DETAIL NO. PL-CB5	REV. A

APPLICABLE PRODUCTS		
PRODUCT NAME	RECOMMENDED HARDWARE (INCLUDED)	BOLT PATTERN
"Omron FH-SM04	(2) S.H.C.S. - M4-0.7mm X 6mm 18-8 SS	F
AVT MAKO G-192B/C	(2) S.H.C.S. - M3-0.5mm X 6mm 18-8 SS	D
Basler Ace Classic	(2) S.H.C.S. - M3-0.5mm X 6mm 18-8 SS	D
Basler Ace L Series	(2) S.H.C.S. - M3-0.5mm X 6mm 18-8 SS	A
Basler Ace U Series	(2) S.H.C.S. - M3-0.5mm X 6mm 18-8 SS	D
Dalsa BOA Series	SMART VISION SUPPLIED	F
Dalsa BOA Spot Series	(2) S.H.C.S. - M4-0.7mm X 8mm 18-8 SS	E
Dalsa BOA2 Series	(2) S.H.C.S. - M4-0.7mm X 8mm 18-8 SS	B
Dalsa Genie Nano Series	(2) S.H.C.S. - M3-0.5mm X 6mm 18-8 SS	C
Dalsa Genie Series	(2) S.H.C.S. - M3-0.5mm X 6mm 18-8 SS	C
Dalsa Genie TS Series	(2) S.H.C.S. - M3-0.5mm X 6mm 18-8 SS	C
Dalsa Linea Series	(2) S.H.C.S. - M4-0.7mm X 8mm 18-8 SS	G
Datalogic M1xx Series	(2) S.H.C.S. - M3-0.5mm X 6mm 18-8 SS	D
Omron FH-SC04"	(2) S.H.C.S. - M4-0.7mm X 6mm 18-8 SS	F
Smart Vision Lights #LM-45	SMART VISION SUPPLIED	F
Smart Vision Lights #LM-75	SMART VISION SUPPLIED	G

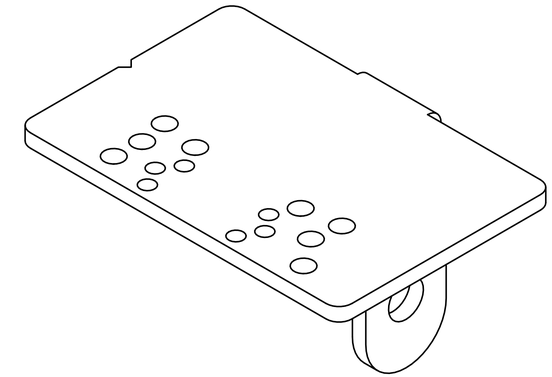

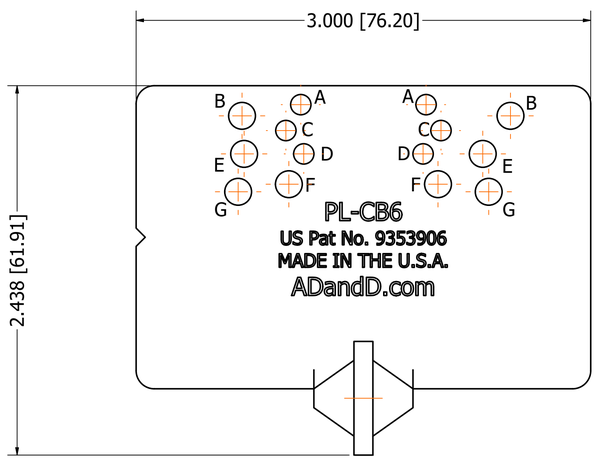

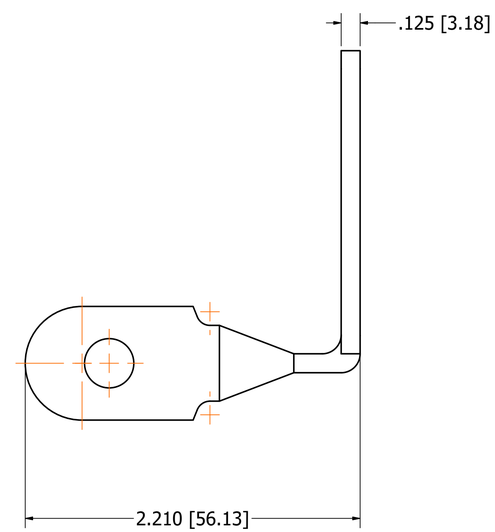

ZONE	REV	DESCRIPTION	DATE	APPROVED BY
	A	RELEASED TO PRODUCTION	3/6/2020	S. RILEY

REVISIONS

PATENT PENDING

BREAK ALL SHARP EDGES AND REMOVE ALL BURRS UNLESS OTHERWISE SPECIFIED

MARK DETAILS WITH P/N, MATERIAL & HEAT TREAT SPEC UNLESS OTHERWISE SPECIFIED

ALL WEIGHTS ARE ESTIMATED AND SHOULD NOT BE USED IN LOADING CALCULATIONS

STANDARD TOLERANCE
UNLESS OTHERWISE SPECIFIED

2 PLACE DEC. ± .030
3 PLACE DEC. ± .005
4 PLACE DEC. ±.0005
ANGLES ± 1°

THIRD ANGLE PROJECTION

GEOMETRIC CHARACTERISTIC SYMBOLS
PER ASME Y14.5M - 1994

FLATNESS
STRAIGHTNESS
CIRCULARITY
CYLINDRICITY
PROFILE OF A SURFACE
PERPENDICULARITY
PARALLELISM
ANGULARITY
CIRC RUNOUT
TOTAL RUNOUT
POSITION
CONCENTRICITY
DIAMETER
AT MAX MATL CONDITION
REGARDLESS OF FEATURE SIZE
AT LEAST MATL CONDITION
DATUM FEATURE

ADandD.com Pop-Link® Mounting Systems

PL CAMERA BRACKET 6

MATERIAL:	DESIGNED BY:S. RILEY
FINISH:	DRAWN BY: S. RILEY
WT.(LBS): 0.260 lbmass	DRAWN DATE: 5/11/2020
SHEET. SIZE: D	SCALE: 2 / 1
DETAIL NO. PL-CB6	REV. A

APPLICABLE PRODUCTS		
PRODUCT NAME	RECOMMENDED HARDWARE (INCLUDED)	BOLT PATTERN
MATROX IRIS GTR	(4) S.H.C.S. - M4-0.7mm X 6mm 18-8SS	A
MICRO EPSILON OPTONCDT ILR2250	(4) S.H.C.S. - M4-0.7mm X 8mm 18-8SS	B

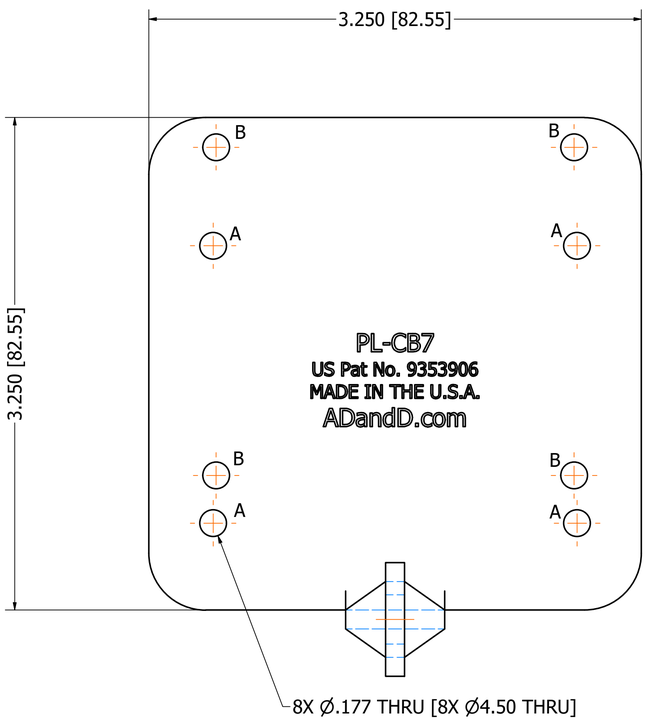

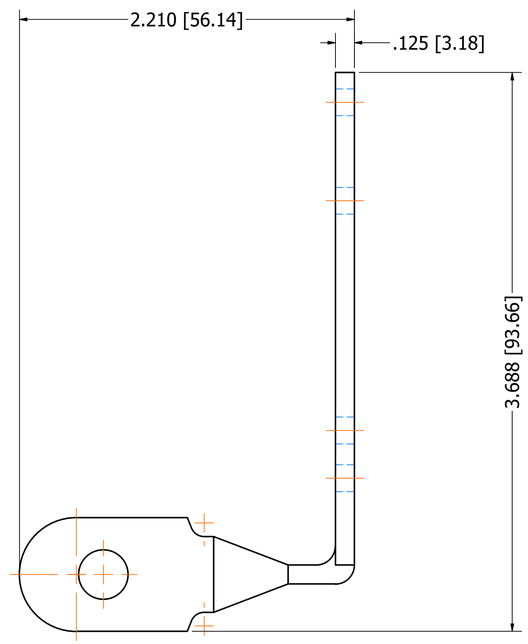

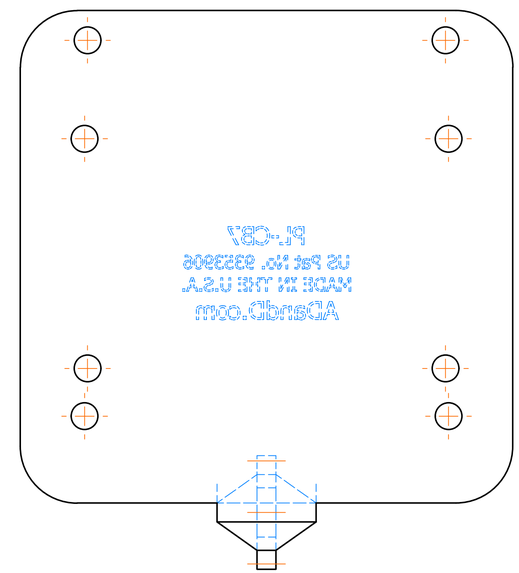

	A	RELEASED TO PRODUCTION	3/6/2020	S. RILEY
ZONE	REV	DESCRIPTION	DATE	APPROVED BY

REVISIONS

PATENT PENDING

BREAK ALL SHARP EDGES AND REMOVE ALL BURRS UNLESS OTHERWISE SPECIFIED

MARK DETAILS WITH P/N, MATERIAL & HEAT TREAT SPEC UNLESS OTHERWISE SPECIFIED

ALL WEIGHTS ARE ESTIMATED AND SHOULD NOT BE USED IN LOADING CALCULATIONS

STANDARD TOLERANCE UNLESS OTHERWISE SPECIFIED	
2 PLACE DEC.	± .030
3 PLACE DEC.	± .005
4 PLACE DEC.	±.0005
ANGLES	± 1˚

THIRD ANGLE PROJECTION

GEOMETRIC CHARACTERISTIC SYMBOLS PER ASME Y14.5M - 1994	
FLATNESS	CIRC RUNOUT
STRAIGHTNESS	TOTAL RUNOUT
CIRCULARITY	POSITION
CYLINDRICITY	CONCENTRICITY
PROFILE OF A SURFACE	DIAMETER
PERPENDICULARITY	AT MAX MATL CONDITION
PARALLELISM	REGARDLESS OF FEATURE SIZE
ANGULARITY	AT LEAST MATL CONDITION
	-A- DATUM FEATURE

ADandD.com Pop-Link® Mounting Systems

PL CAMERA BRACKET 7

MATERIAL:		DESIGNED BY:S. RILEY
FINISH:		DRAWN BY: S. RILEY
WT.(LBS): 0.424 lbmass		DRAWN DATE: 5/11/2020
	SHEET. SIZE: D	SCALE: 2 / 1
DETAIL NO. PL-CB7		REV. A

APPLICABLE PRODUCTS		
PRODUCT NAME	RECOMMENDED HARDWARE (INCLUDED)	BOLT PATTERN
IDS ENSENSO X SERIES CAMERAS	(4) S.H.C.S. - M4-0.7mm X 6mm 18-8SS	A

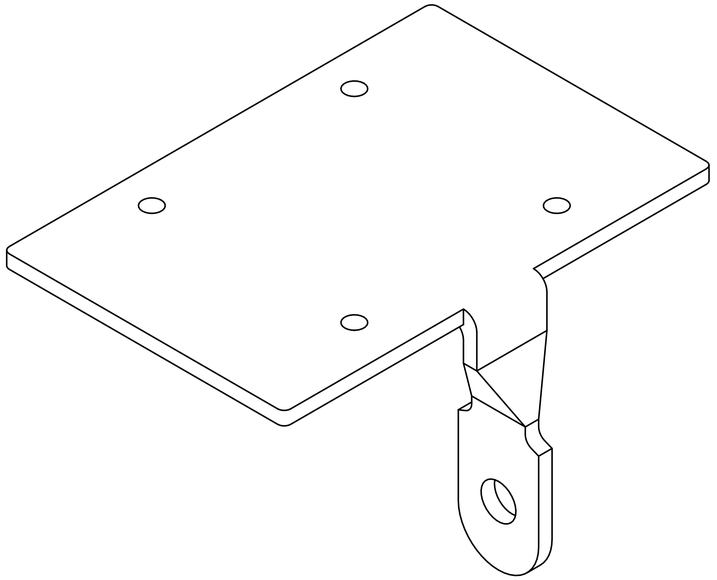

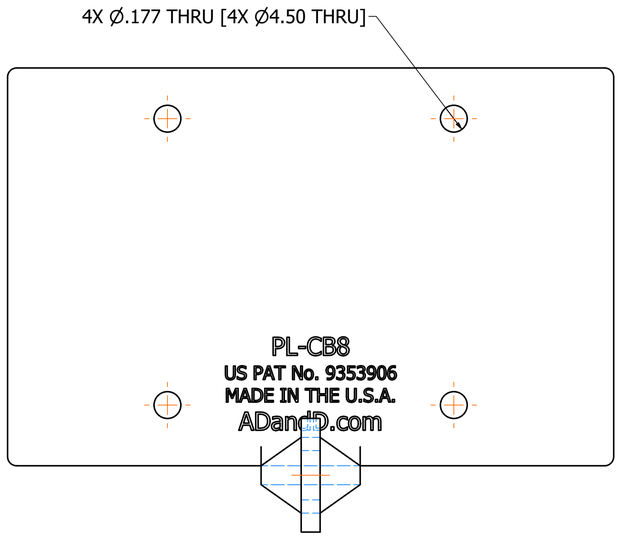

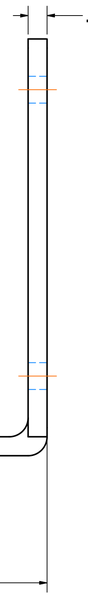

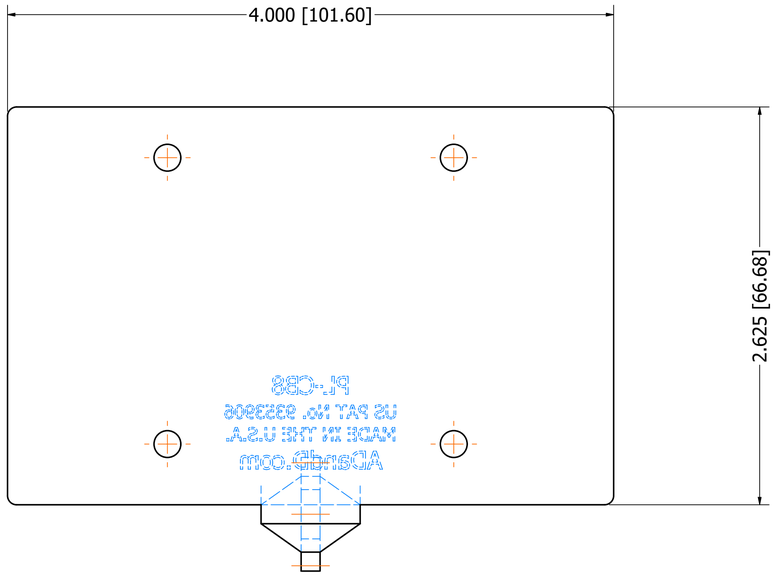

ZONE	REV	DESCRIPTION	DATE	APPROVED BY
	A	RELEASED TO PRODUCTION	3/6/2020	S. RILEY

REVISIONS

PATENT PENDING

BREAK ALL SHARP EDGES AND REMOVE ALL BURRS UNLESS OTHERWISE SPECIFIED

MARK DETAILS WITH P/N, MATERIAL & HEAT TREAT SPEC UNLESS OTHERWISE SPECIFIED

ALL WEIGHTS ARE ESTIMATED AND SHOULD NOT BE USED IN LOADING CALCULATIONS

STANDARD TOLERANCE
UNLESS OTHERWISE SPECIFIED

2 PLACE DEC. ± .030
3 PLACE DEC. ± .005
4 PLACE DEC. ±.0005
ANGLES ± 1˚

THIRD ANGLE PROJECTION

GEOMETRIC CHARACTERISTIC SYMBOLS
PER ASME Y14.5M - 1994

	FLATNESS		CIRC RUNOUT
	STRAIGHTNESS		TOTAL RUNOUT
	CIRCULARITY		POSITION
	CYLINDRICITY		CONCENTRICITY
	PROFILE OF A SURFACE	Ø	DIAMETER
	PERPENDICULARITY	Ⓜ	AT MAX MATL CONDITION
	PARALLELISM	Ⓢ	REGARDLESS OF FEATURE SIZE
	ANGULARITY	Ⓛ	AT LEAST MATL CONDITION
		-A-	DATUM FEATURE

ADandD.com Pop-Link® Mounting Systems

PL CAMERA BRACKET 8

MATERIAL:	DESIGNED BY:S. RILEY
FINISH:	DRAWN BY: S. RILEY
WT.(LBS): 0.054 lbmass	DRAWN DATE: 5/11/2020
SHEET. SIZE: D	SCALE: 2 / 1
DETAIL NO. PL-CB8	REV. A

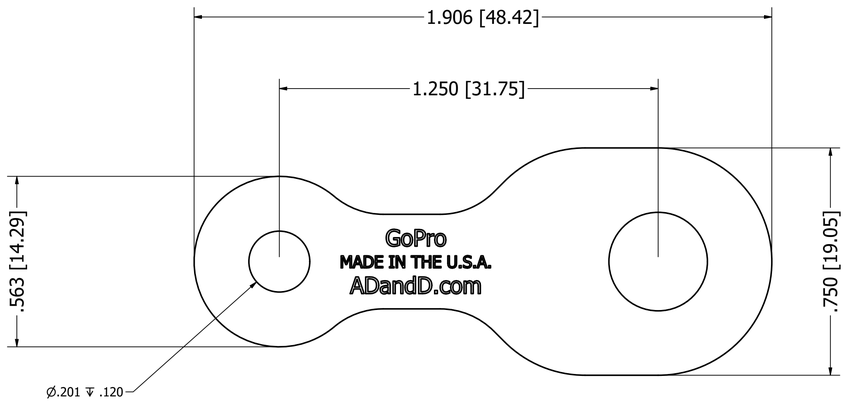

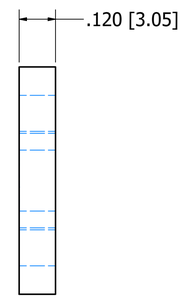

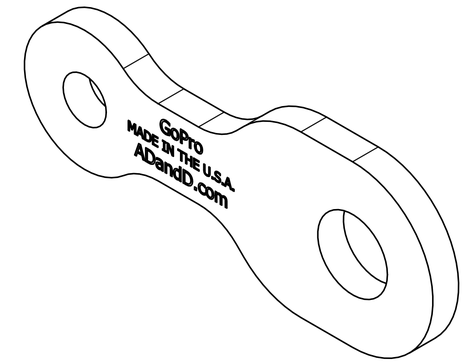

ZONE	REV	DESCRIPTION	DATE	APPROVED BY
	A	RELEASED TO PRODUCTION	3/6/2020	S. RILEY

REVISIONS

PATENT PENDING

BREAK ALL SHARP EDGES AND REMOVE ALL BURRS UNLESS OTHERWISE SPECIFIED

MARK DETAILS WITH P/N, MATERIAL & HEAT TREAT SPEC UNLESS OTHERWISE SPECIFIED

ALL WEIGHTS ARE ESTIMATED AND SHOULD NOT BE USED IN LOADING CALCULATIONS

STANDARD TOLERANCE
UNLESS OTHERWISE SPECIFIED

2 PLACE DEC. ± .030
3 PLACE DEC. ± .005
4 PLACE DEC. ±.0005
ANGLES ± 1°

THIRD ANGLE PROJECTION

GEOMETRIC CHARACTERISTIC SYMBOLS
PER ASME Y14.5M - 1994

▱	FLATNESS	↗	CIRC RUNOUT
—	STRAIGHTNESS	⌰	TOTAL RUNOUT
○	CIRCULARITY	⌖	POSITION
⌭	CYLINDRICITY	◎	CONCENTRICITY
⌓	PROFILE OF A SURFACE	Ø	DIAMETER
⊥	PERPENDICULARITY	Ⓜ	AT MAX MATL CONDITION
//	PARALLELISM	Ⓢ	REGARDLESS OF FEATURE SIZE
∠	ANGULARITY	Ⓛ	AT LEAST MATL CONDITION
		-A-	DATUM FEATURE

ADandD.com Pop-Link® Mounting Systems

POP-LINK GOPRO MOUNTING BRACKET

MATERIAL:	DESIGNED BY:S. RILEY
FINISH:	DRAWN BY: S. RILEY
WT.(LBS): 0.031 lbmass	DRAWN DATE: 7/31/2020
SHEET. SIZE: D	SCALE: 4 : 1
DETAIL NO. PL-GOPRO	REV. A

APPLICABLE PRODUCTS		
PRODUCT NAME	RECOMMENDED HARDWARE (INCLUDED)	BOLT PATTERN
SMART VISION LIGHTS S75 BRICK	(4) S.H.C.S. - M4-0.7mm X 20mm 18-8SS (4) JAM NUT - M4-0.7mm 18-8SS	A
SAMSUNG TECHWIN SNO-L6083R / SNO-L5083R	(3) S.H.C.S. - M5-0.8mm X 18mm 18-8SS (3) JAM NUT - M5-0.8mm 18-8SS	B
HANWHA TECHWIN SNO-L6083R / SNO-L5083R	(3) S.H.C.S. - M5-0.8mm X 18mm 18-8SS (3) JAM NUT - M5-0.8mm 18-8SS	B

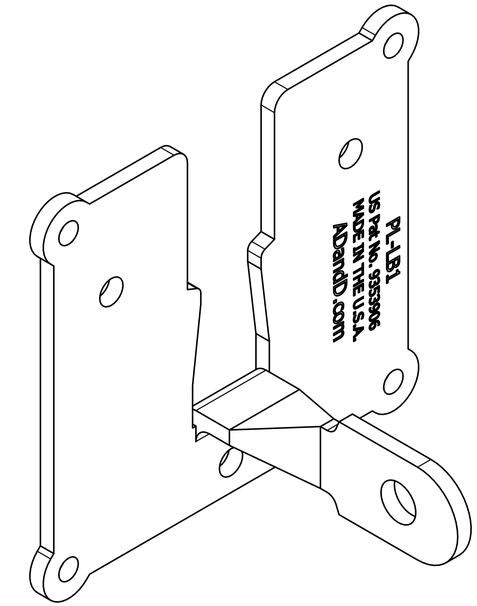

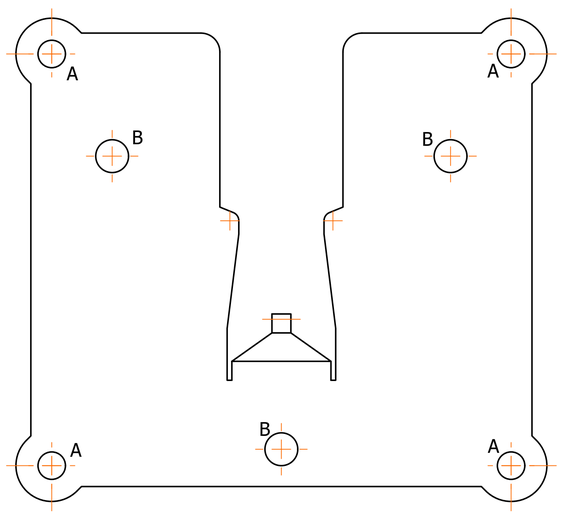

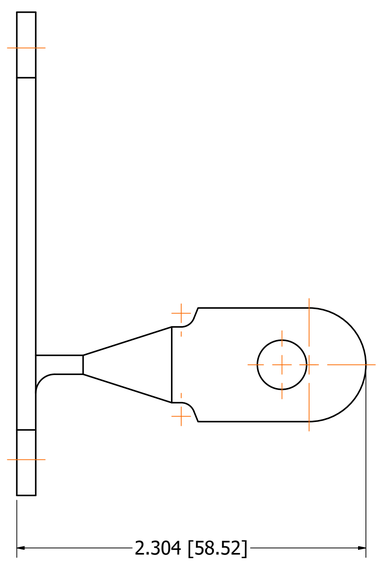

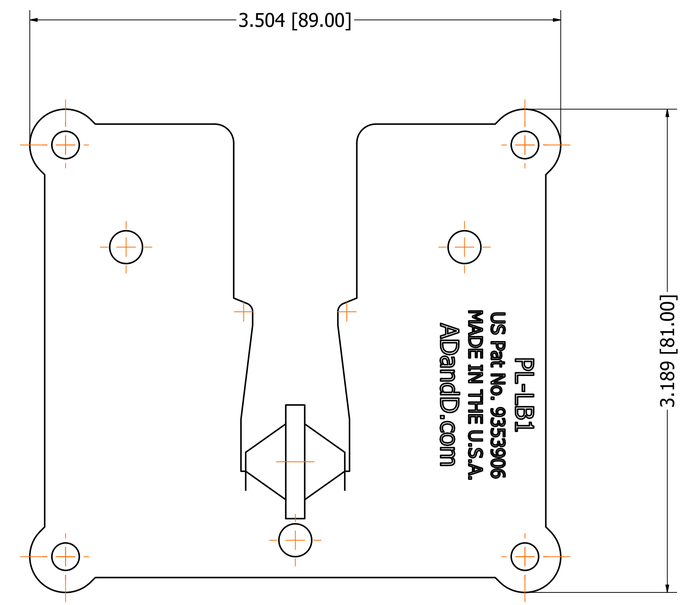

ZONE	REV	DESCRIPTION	DATE	APPROVED BY
	A	RELEASED TO PRODUCTION	3/6/2020	S. RILEY

REVISIONS

PATENT PENDING

BREAK ALL SHARP EDGES AND REMOVE ALL BURRS UNLESS OTHERWISE SPECIFIED

MARK DETAILS WITH P/N, MATERIAL & HEAT TREAT SPEC UNLESS OTHERWISE SPECIFIED

ALL WEIGHTS ARE ESTIMATED AND SHOULD NOT BE USED IN LOADING CALCULATIONS

STANDARD TOLERANCE
UNLESS OTHERWISE SPECIFIED

2 PLACE DEC. ± .030
3 PLACE DEC. ± .005
4 PLACE DEC. ±.0005
ANGLES ± 1°

THIRD ANGLE PROJECTION

GEOMETRIC CHARACTERISTIC SYMBOLS
PER ASME Y14.5M - 1994

FLATNESS
STRAIGHTNESS
CIRCULARITY
CYLINDRICITY
PROFILE OF A SURFACE
PERPENDICULARITY
PARALLELISM
ANGULARITY
CIRC RUNOUT
TOTAL RUNOUT
POSITION
CONCENTRICITY
DIAMETER
AT MAX MATL CONDITION
REGARDLESS OF FEATURE SIZE
AT LEAST MATL CONDITION
DATUM FEATURE

ADandD.com Pop-Link® Mounting Systems

PL LIGHT BRACKET 1

MATERIAL:	DESIGNED BY:jsmith
FINISH:	DRAWN BY: S. RILEY
WT.(LBS): 0.353 lbmass	DRAWN DATE: 5/11/2020
SHEET. SIZE: D	SCALE: 2 / 1
DETAIL NO. PL-LB1	REV. A

APPLICABLE PRODUCTS		
PRODUCT NAME	RECOMMENDED HARDWARE (INCLUDED)	BOLT PATTERN
SMART VISION LIGHTS L300 LINEAR	(2) S.H.C.S. - M5-0.8mm X 12mm 18-8SS (2) JAM NUT - M5-0.8mm 18-8SS	A
SMART VISION LIGHTS LXE300 LINEAR	(4) S.H.C.S. - M5-0.8mm X 6mm 18-8SS	B
KEYENCE CA-DBW24W	(2) S.H.C.S. - M3-0.5mm X 6mm 18-8SS	C
KEYENCE CA-DBW34H	(2) S.H.C.S. - M4-0.7mm X 6mm 18-8SS	D
KEYENCE CADBW50H	(2) S.H.C.S. - M4-0.7mm X 6mm 18-8SS	E

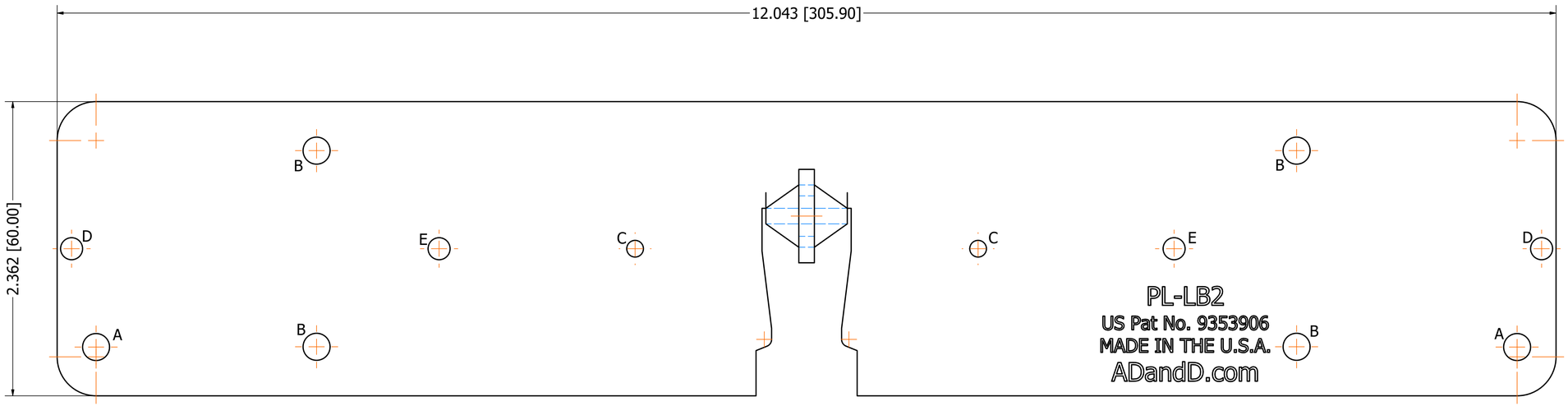

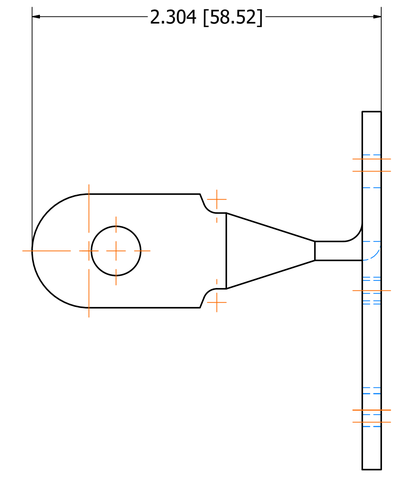

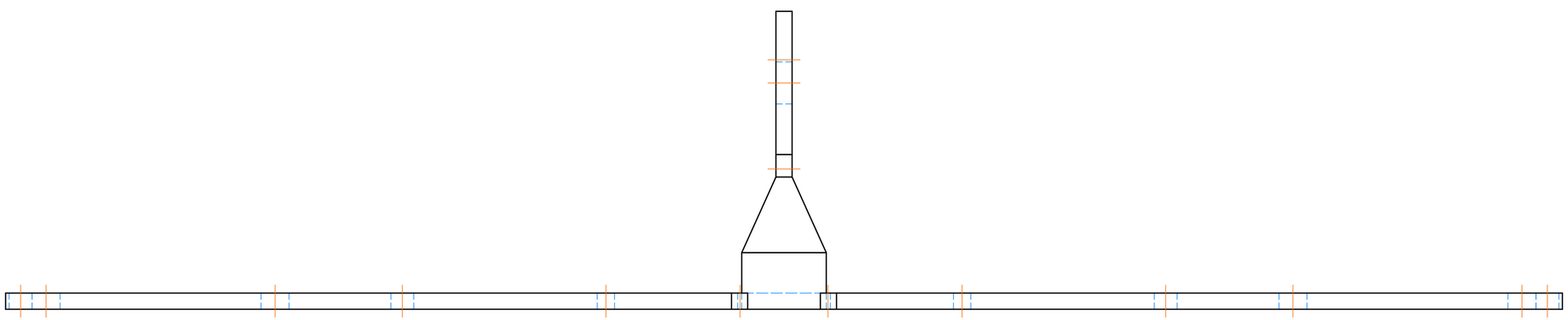

PATENT PENDING

BREAK ALL SHARP EDGES AND REMOVE ALL BURRS UNLESS OTHERWISE SPECIFIED

MARK DETAILS WITH P/N, MATERIAL & HEAT TREAT SPEC UNLESS OTHERWISE SPECIFIED

ALL WEIGHTS ARE ESTIMATED AND SHOULD NOT BE USED IN LOADING CALCULATIONS

STANDARD TOLERANCE UNLESS OTHERWISE SPECIFIED	GEOMETRIC CHARACTERISTIC SYMBOLS PER ASME Y14.5M - 1994	
2 PLACE DEC. ± .030	FLATNESS	CIRC RUNOUT
3 PLACE DEC. ± .005	STRAIGHTNESS	TOTAL RUNOUT
4 PLACE DEC. ±.0005	CIRCULARITY	POSITION
ANGLES ± 1°	CYLINDRICITY	CONCENTRICITY
THIRD ANGLE PROJECTION	PROFILE OF A SURFACE	DIAMETER
	PERPENDICULARITY	AT MAX MATL CONDITION
	PARALLELISM	REGARDLESS OF FEATURE SIZE
	ANGULARITY	AT LEAST MATL CONDITION
	-A-	DATUM FEATURE

ZONE	REV	DESCRIPTION	DATE	APPROVED BY
	A	RELEASED TO PRODUCTION	3/6/2020	S. RILEY

REVISIONS

ADandD.com Pop-Link® Mounting Systems

PL LIGHT BRACKET 2

MATERIAL:		DESIGNED BY:jsmith
FINISH:		DRAWN BY: S. RILEY
WT.(LBS): 1.031 lbmass		DRAWN DATE: 5/11/2020
	SHEET. SIZE: D	SCALE: 2 / 1
DETAIL NO. PL-LB2		REV. A

APPLICABLE PRODUCTS		
PRODUCT NAME	RECOMMENDED HARDWARE (INCLUDED)	BOLT PATTERN
KEYENCE #CA-DRW10X	(4) S.H.C.S. - M3-0.5mm X 6mm 18-8SS	A
KEYENCE #CA DRW13M	(4) S.H.C.S. - M3-0.5mm X 6mm 18-8SS	B

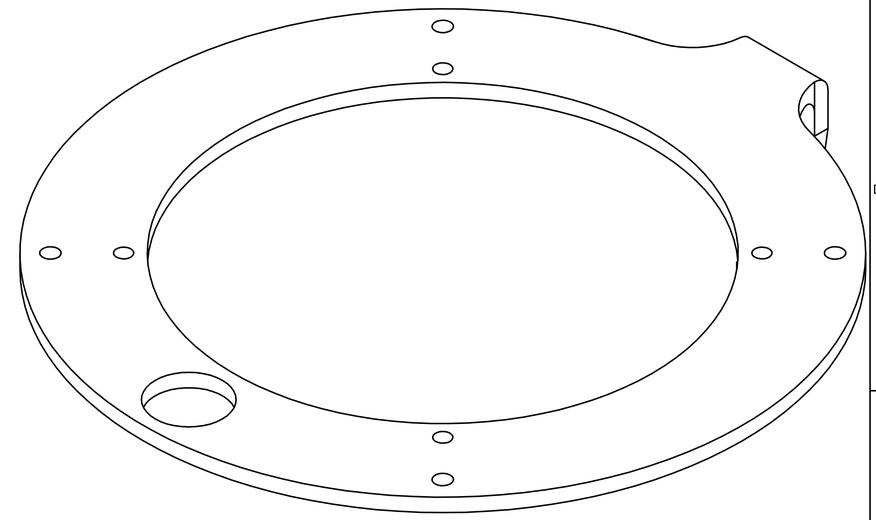

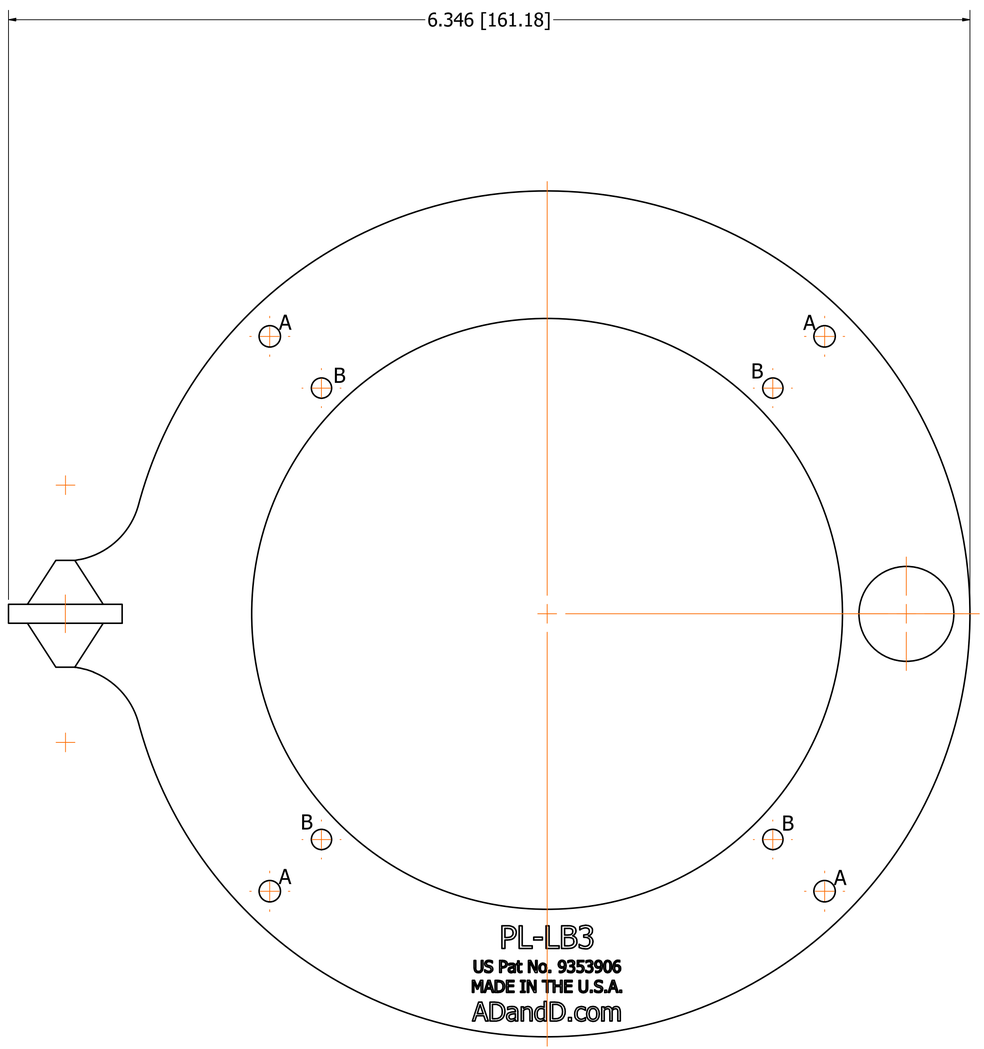

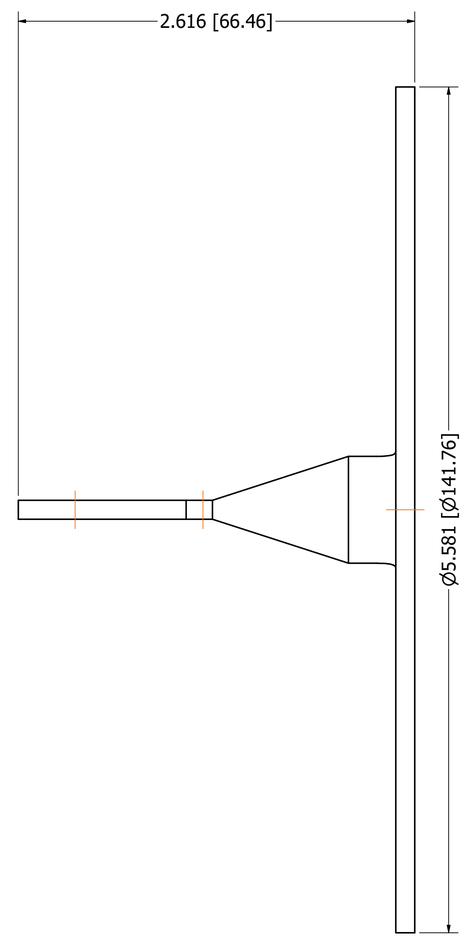

	A	RELEASED TO PRODUCTION	3/6/2020	S. RILEY
ZONE	REV	DESCRIPTION	DATE	APPROVED BY

REVISIONS

PATENT PENDING

BREAK ALL SHARP EDGES AND REMOVE ALL BURRS UNLESS OTHERWISE SPECIFIED

MARK DETAILS WITH P/N, MATERIAL & HEAT TREAT SPEC UNLESS OTHERWISE SPECIFIED

ALL WEIGHTS ARE ESTIMATED AND SHOULD NOT BE USED IN LOADING CALCULATIONS

STANDARD TOLERANCE
UNLESS OTHERWISE SPECIFIED

2 PLACE DEC. ± .030
3 PLACE DEC. ± .005
4 PLACE DEC. ±.0005
ANGLES ± 1°

THIRD ANGLE PROJECTION

GEOMETRIC CHARACTERISTIC SYMBOLS
PER ASME Y14.5M - 1994

FLATNESS
STRAIGHTNESS
CIRCULARITY
CYLINDRICITY
PROFILE OF A SURFACE
PERPENDICULARITY
PARALLELISM
ANGULARITY
CIRC RUNOUT
TOTAL RUNOUT
POSITION
CONCENTRICITY
DIAMETER
AT MAX MATL CONDITION
REGARDLESS OF FEATURE SIZE
AT LEAST MATL CONDITION
-A- DATUM FEATURE

ADandD.com Pop-Link® Mounting Systems

PL LIGHT BRACKET 3

MATERIAL:	DESIGNED BY:D. BIDDINGER
FINISH:	DRAWN BY: S. RILEY
WT.(LBS): 0.518 lbmass	DRAWN DATE: 5/26/2020
SHEET. SIZE: D	SCALE: 2 / 1
DETAIL NO. PL-LB3	REV. A

APPLICABLE PRODUCTS		
PRODUCT NAME	RECOMMENDED HARDWARE (INCLUDED)	BOLT PATTERN
KEYENCE #CA-DRW5X	(4) S.H.C.S. - M3-0.5mm X 6mm 18-8SS	A

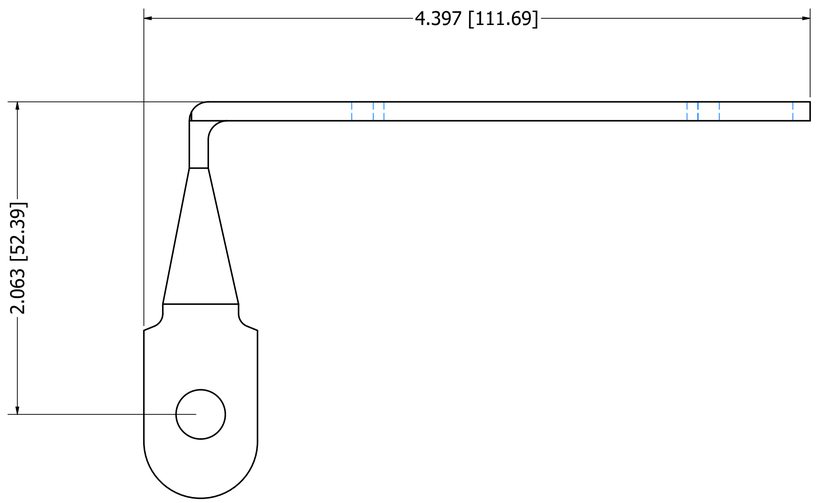

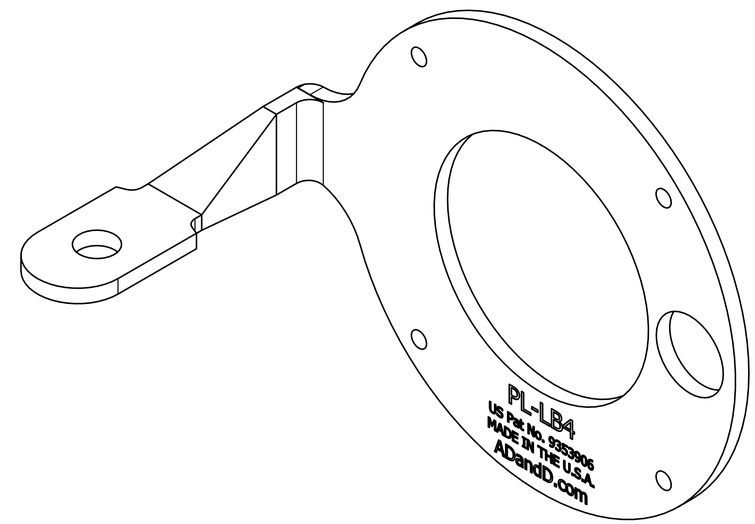

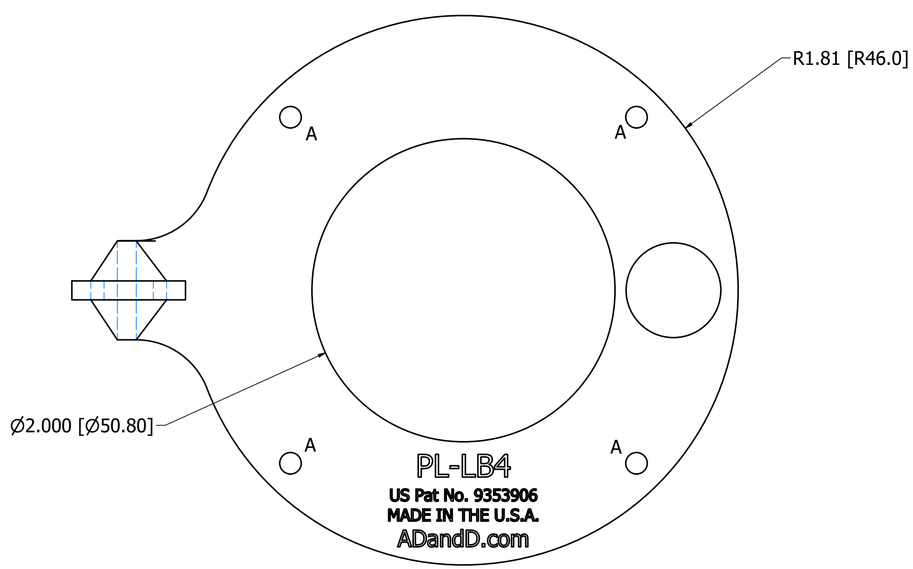

ZONE	REV	DESCRIPTION	DATE	APPROVED BY
	A	RELEASED TO PRODUCTION	3/6/2020	S. RILEY

REVISIONS

PATENT PENDING

BREAK ALL SHARP EDGES AND REMOVE ALL BURRS UNLESS OTHERWISE SPECIFIED

MARK DETAILS WITH P/N, MATERIAL & HEAT TREAT SPEC UNLESS OTHERWISE SPECIFIED

ALL WEIGHTS ARE ESTIMATED AND SHOULD NOT BE USED IN LOADING CALCULATIONS

STANDARD TOLERANCE
UNLESS OTHERWISE SPECIFIED

2 PLACE DEC. ± .030
3 PLACE DEC. ± .005
4 PLACE DEC. ±.0005
ANGLES ± 1°

THIRD ANGLE PROJECTION

GEOMETRIC CHARACTERISTIC SYMBOLS
PER ASME Y14.5M - 1994

	FLATNESS		CIRC RUNOUT
	STRAIGHTNESS		TOTAL RUNOUT
	CIRCULARITY		POSITION
	CYLINDRICITY		CONCENTRICITY
	PROFILE OF A SURFACE	Ø	DIAMETER
	PERPENDICULARITY	Ⓜ	AT MAX MATL CONDITION
	PARALLELISM	Ⓢ	REGARDLESS OF FEATURE SIZE
	ANGULARITY	Ⓛ	AT LEAST MATL CONDITION
		-A-	DATUM FEATURE

ADandD.com Pop-Link® Mounting Systems

PL LIGHT BRACKET LB4

MATERIAL:	DESIGNED BY:DOUG
FINISH:	DRAWN BY: S. RILEY
WT.(LBS): 0.322 lbmass	DRAWN DATE: 5/26/2020
SHEET. SIZE: D	SCALE: 2 / 1
DETAIL NO. PL-LB4	REV. A

APPLICABLE PRODUCTS		
PRODUCT NAME	RECOMMENDED HARDWARE (INCLUDED)	BOLT PATTERN
KEYENCE #CA-DRM20X	(8) S.H.C.S. - M4-0.7mm X 8mm 18-8SS	A
KEYENCE #CA-DRW20X	(4) S.H.C.S. - M4-0.7mm X 8mm 18-8SS	B
AD&D PL-BALLBASE	(3) S.H.C.S. - M6-1.0mm X 14mm 18-8SS (3) JAM NUT - M6-1.0mm 18-8SS	C
AD&D #HDPL-BALLBASE	(3) S.H.C.S. - M6-1.0mm X 20mm 18-8SS (3) JAM NUT - M6-1.0mm 18-8SS	D
ALTERNATIVE MOUNTING	NO FASTENERS ENCLUDED	E

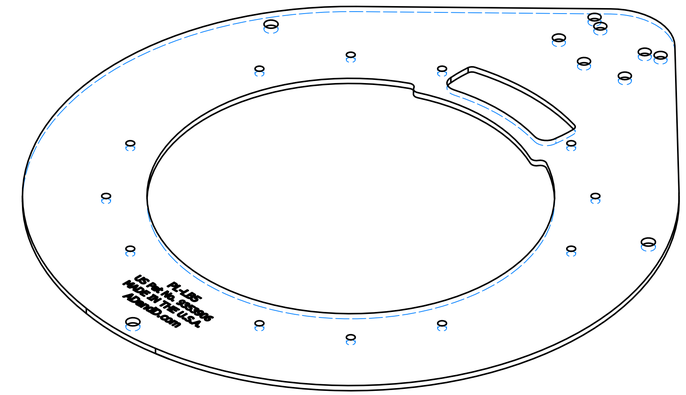

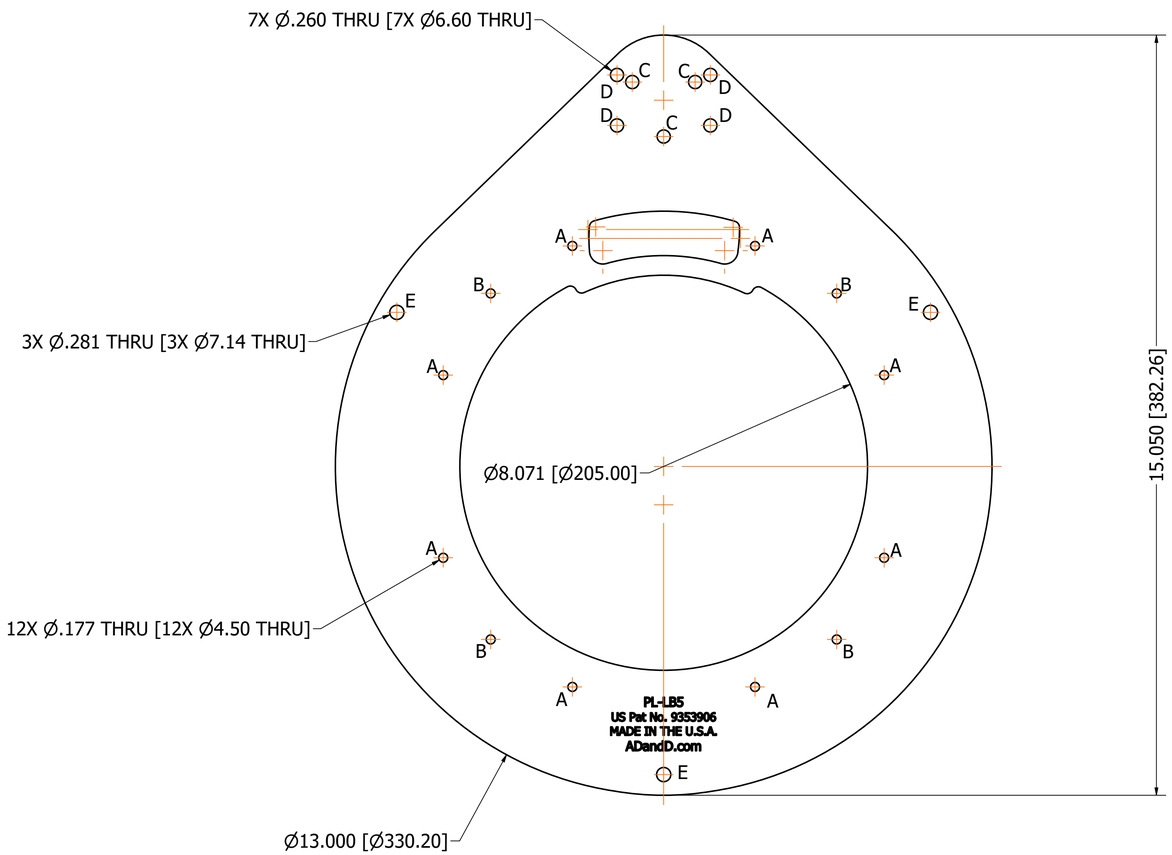

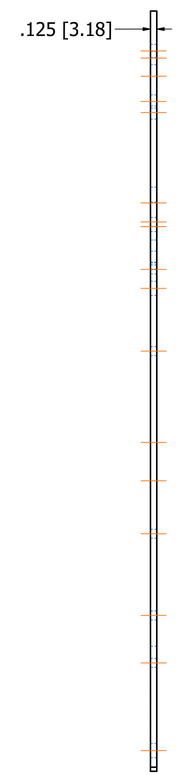

ZONE	REV	DESCRIPTION	DATE	APPROVED BY
	A	RELEASED TO PRODUCTION	3/6/2020	S. RILEY

REVISIONS

PATENT PENDING

BREAK ALL SHARP EDGES AND REMOVE ALL BURRS UNLESS OTHERWISE SPECIFIED

MARK DETAILS WITH P/N, MATERIAL & HEAT TREAT SPEC UNLESS OTHERWISE SPECIFIED

ALL WEIGHTS ARE ESTIMATED AND SHOULD NOT BE USED IN LOADING CALCULATIONS

STANDARD TOLERANCE
UNLESS OTHERWISE SPECIFIED

2 PLACE DEC. ± .030
3 PLACE DEC. ± .005
4 PLACE DEC. ±.0005
ANGLES ± 1°

THIRD ANGLE PROJECTION

GEOMETRIC CHARACTERISTIC SYMBOLS
PER ASME Y14.5M - 1994

	FLATNESS		CIRC RUNOUT
	STRAIGHTNESS		TOTAL RUNOUT
	CIRCULARITY		POSITION
	CYLINDRICITY		CONCENTRICITY
	PROFILE OF A SURFACE	Ø	DIAMETER
	PERPENDICULARITY	Ⓜ	AT MAX MATL CONDITION
	PARALLELISM	Ⓢ	REGARDLESS OF FEATURE SIZE
	ANGULARITY	Ⓛ	AT LEAST MATL CONDITION
		-A-	DATUM FEATURE

ADandD.com Pop-Link® Mounting Systems

PL LIGHT BRACKET LB5

MATERIAL:	DESIGNED BY:S. RILEY
FINISH:	DRAWN BY: S. RILEY
WT.(LBS): 3.147 lbmass	DRAWN DATE: 6/15/2020
SHEET. SIZE: D	SCALE: 2 / 3
DETAIL NO. PL-LB5	REV. A

APPLICABLE PRODUCTS		
PRODUCT NAME	RECOMMENDED HARDWARE (INCLUDED)	BOLT PATTERN
KEYENCE CA-DRM5X	(4) S.H.C.S. - M3-0.5mm X 6mm 18-8SS	A
KEYENCE CA-DRW5X	(4) S.H.C.S. - M3-0.5mm X 6mm 18-8SS	B
KEYENCE CA-DRW10F	(4) S.H.C.S. - M3-0.5mm X 6mm 18-8SS	D
SMART VISION LIGHTS R80	(3) S.H.C.S. - M4-0.7mm X 6mm 18-8SS	C

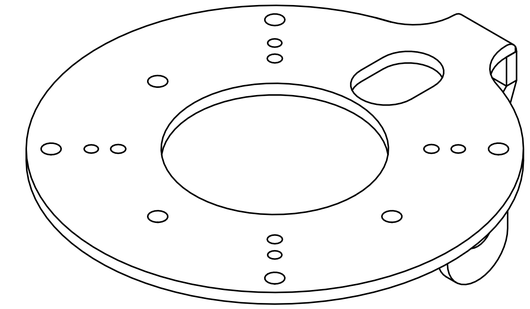

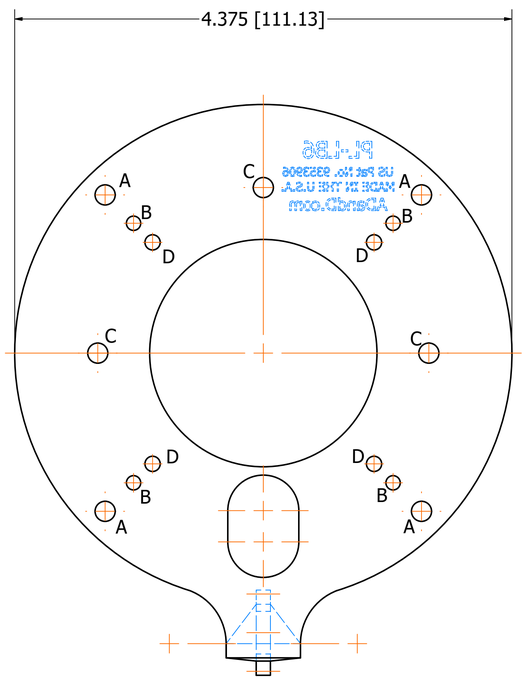

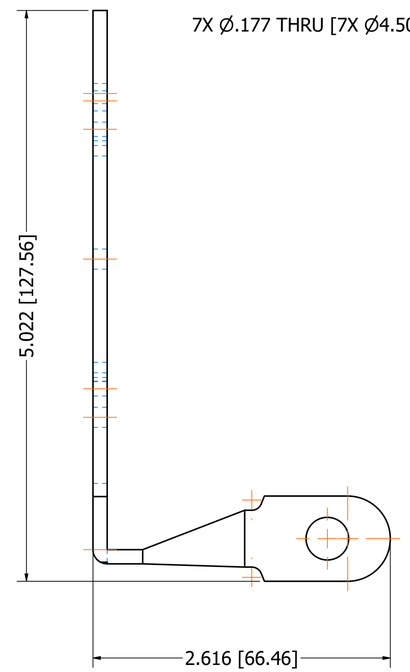

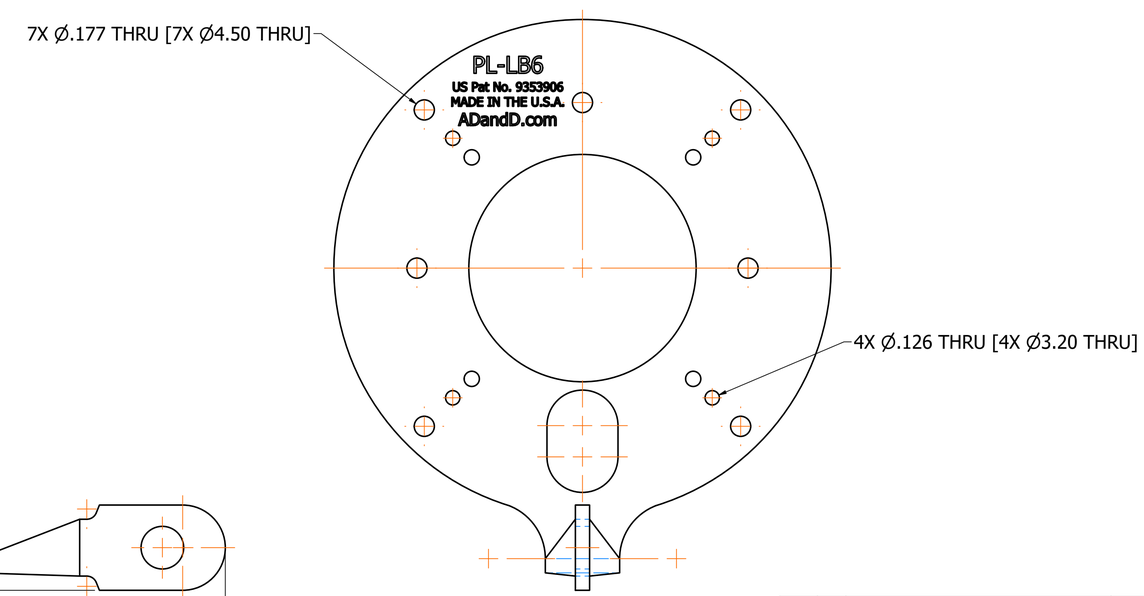

ZONE	REV	DESCRIPTION	DATE	APPROVED BY
	B	ADDED MOUNTING FOR KEYENCE CA-DRW10F	11/18/2020	S. RILEY
	A	RELEASED TO PRODUCTION	3/6/2020	S. RILEY

REVISIONS

PATENT PENDING

BREAK ALL SHARP EDGES AND REMOVE ALL BURRS UNLESS OTHERWISE SPECIFIED

MARK DETAILS WITH P/N, MATERIAL & HEAT TREAT SPEC UNLESS OTHERWISE SPECIFIED

ALL WEIGHTS ARE ESTIMATED AND SHOULD NOT BE USED IN LOADING CALCULATIONS

STANDARD TOLERANCE
UNLESS OTHERWISE SPECIFIED

2 PLACE DEC. ± .030
3 PLACE DEC. ± .005
4 PLACE DEC. ±.0005
ANGLES ± 1°

THIRD ANGLE PROJECTION

GEOMETRIC CHARACTERISTIC SYMBOLS
PER ASME Y14.5M - 1994

FLATNESS
STRAIGHTNESS
CIRCULARITY
CYLINDRICITY
PROFILE OF A SURFACE
PERPENDICULARITY
PARALLELISM
ANGULARITY
CIRC RUNOUT
TOTAL RUNOUT
POSITION
CONCENTRICITY
DIAMETER
AT MAX MATL CONDITION
REGARDLESS OF FEATURE SIZE
AT LEAST MATL CONDITION
DATUM FEATURE

ADandD.com Pop-Link® Mounting Systems

PL LIGHT BRACKET 6

MATERIAL:	DESIGNED BY:S. RILEY
FINISH:	DRAWN BY: S. RILEY
WT.(LBS): 0.477 lbmass	DRAWN DATE: 5/15/2020
SHEET. SIZE: D	SCALE: 3 / 2
DETAIL NO. PL-LB6	REV. B

APPLICABLE PRODUCTS		
PRODUCT NAME	RECOMMENDED HARDWARE (INCLUDED)	BOLT PATTERN
KEYENCE CA-DRW10X	(4) S.H.C.S. - M3-0.5mm X 6mm 18-8SS	A
KEYENCE CA-DRM10X	(4) S.H.C.S. - M4-0.7mm X 6mm 18-8SS	B
KEYENCE CA-DRW13X	(4) S.H.C.S. - M3-0.5mm X 6mm 18-8SS	D
SMART VISION LIGHTS R130	(5) S.H.C.S. - M4-0.7mm X 6mm 18-8SS	C

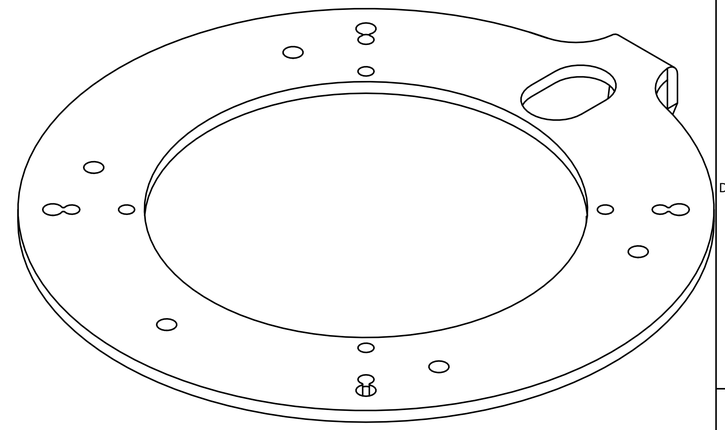

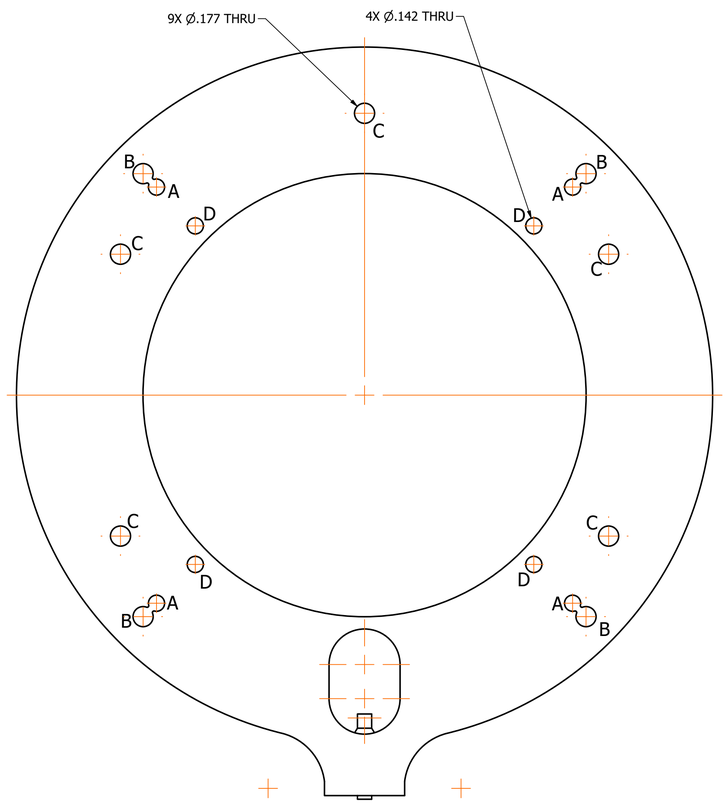

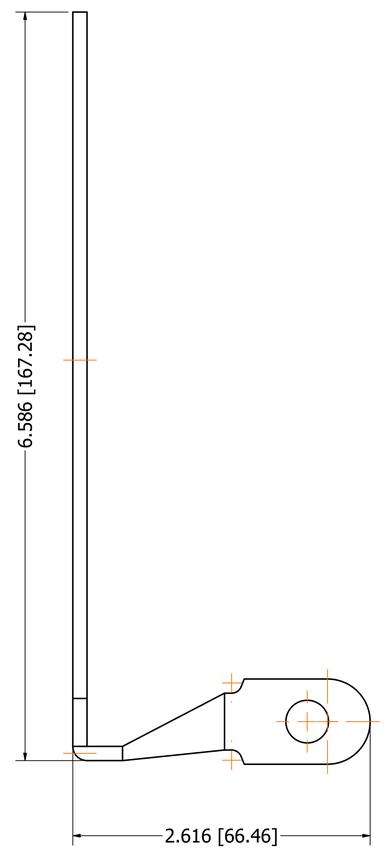

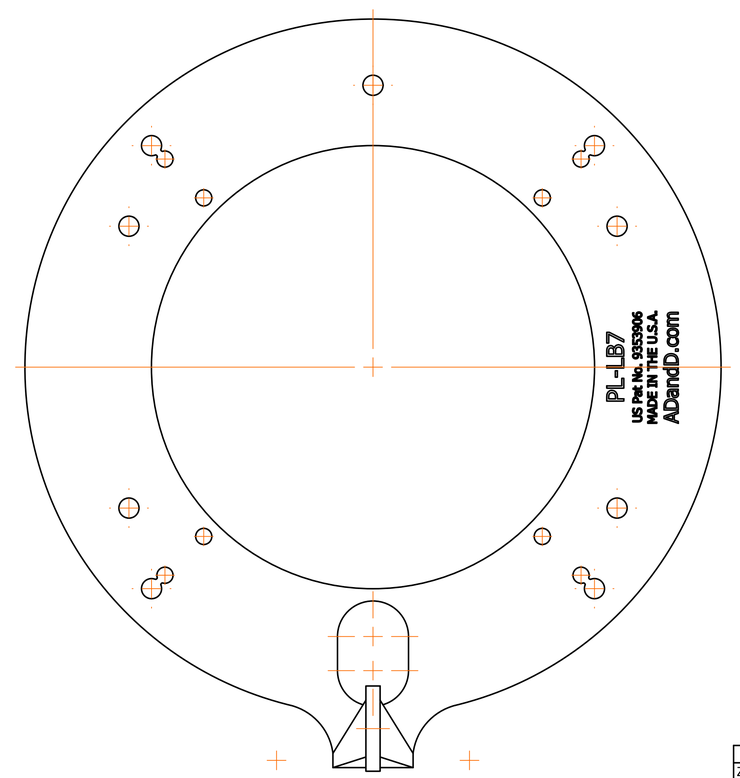

ZONE	REV	DESCRIPTION	DATE	APPROVED BY
	A	RELEASED TO PRODUCTION	3/6/2020	S. RILEY

REVISIONS

PATENT PENDING

BREAK ALL SHARP EDGES AND REMOVE ALL BURRS UNLESS OTHERWISE SPECIFIED

MARK DETAILS WITH P/N, MATERIAL & HEAT TREAT SPEC UNLESS OTHERWISE SPECIFIED

ALL WEIGHTS ARE ESTIMATED AND SHOULD NOT BE USED IN LOADING CALCULATIONS

STANDARD TOLERANCE
UNLESS OTHERWISE SPECIFIED

2 PLACE DEC. ± .030
3 PLACE DEC. ± .005
4 PLACE DEC. ±.0005
ANGLES ± 1°

THIRD ANGLE PROJECTION

GEOMETRIC CHARACTERISTIC SYMBOLS
PER ASME Y14.5M - 1994

	FLATNESS		CIRC RUNOUT
	STRAIGHTNESS		TOTAL RUNOUT
	CIRCULARITY		POSITION
	CYLINDRICITY		CONCENTRICITY
	PROFILE OF A SURFACE	Ø	DIAMETER
	PERPENDICULARITY	Ⓜ	AT MAX MATL CONDITION
	PARALLELISM	Ⓢ	REGARDLESS OF FEATURE SIZE
	ANGULARITY	Ⓛ	AT LEAST MATL CONDITION
		-A-	DATUM FEATURE

ADandD.com Pop-Link® Mounting Systems

PL LIGHT BRACKET 7

MATERIAL:	DESIGNED BY:S. RILEY
FINISH:	DRAWN BY: S. RILEY
WT.(LBS): 0.680 lbmass	DRAWN DATE: 5/14/2020
SHEET. SIZE: D	SCALE: 3 / 2
DETAIL NO. PL-LB7	REV. A

APPLICABLE PRODUCTS		
PRODUCT NAME	RECOMMENDED HARDWARE (INCLUDED)	BOLT PATTERN
KEYENCE #CA-DQP12X	(4) S.H.C.S. - M4-0.7mm X 8mm 18-8SS	

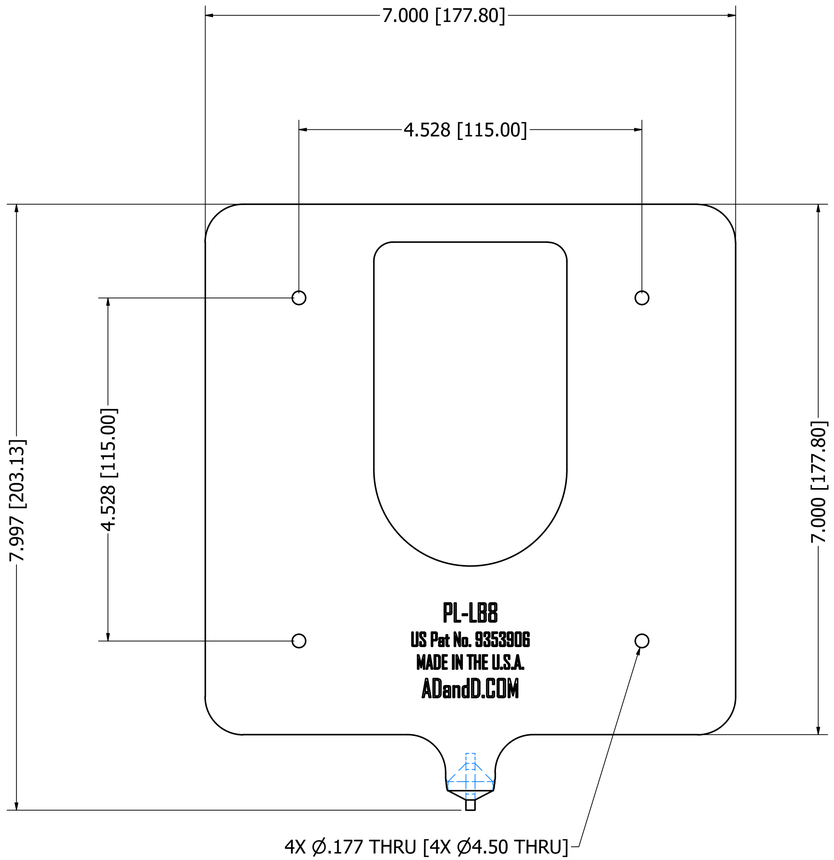

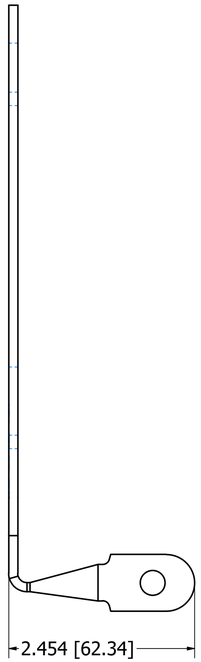

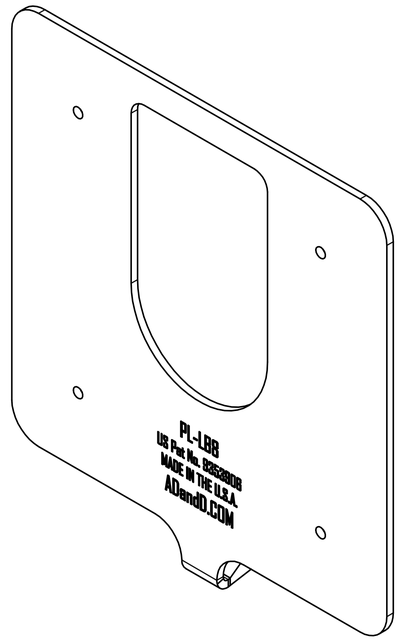

ZONE	REV	DESCRIPTION	DATE	APPROVED BY
	A	RELEASED TO PRODUCTION	11/18/2020	S. RILEY

REVISIONS

PATENT PENDING

BREAK ALL SHARP EDGES AND REMOVE ALL BURRS UNLESS OTHERWISE SPECIFIED

MARK DETAILS WITH P/N, MATERIAL & HEAT TREAT SPEC UNLESS OTHERWISE SPECIFIED

ALL WEIGHTS ARE ESTIMATED AND SHOULD NOT BE USED IN LOADING CALCULATIONS

STANDARD TOLERANCE
UNLESS OTHERWISE SPECIFIED

2 PLACE DEC. ± .030
3 PLACE DEC. ± .005
4 PLACE DEC. ±.0005
ANGLES ± 1˚

THIRD ANGLE PROJECTION

GEOMETRIC CHARACTERISTIC SYMBOLS
PER ASME Y14.5M - 1994

FLATNESS
STRAIGHTNESS
CIRCULARITY
CYLINDRICITY
PROFILE OF A SURFACE
PERPENDICULARITY
PARALLELISM
ANGULARITY
CIRC RUNOUT
TOTAL RUNOUT
POSITION
CONCENTRICITY
DIAMETER
AT MAX MATL CONDITION
REGARDLESS OF FEATURE SIZE
AT LEAST MATL CONDITION
DATUM FEATURE

ADandD.com Pop-Link® Mounting Systems

PL LIGHT BRACKET 8

MATERIAL:		DESIGNED BY:S. RILEY	
FINISH:		DRAWN BY: S. RILEY	
WT.(LBS): 1.409 lbmass		DRAWN DATE: 11/18/2020	
	SHEET. SIZE: D	SCALE: 1 : 1	SHEET 2 OF 2
DETAIL NO. PL-LB8			REV. A

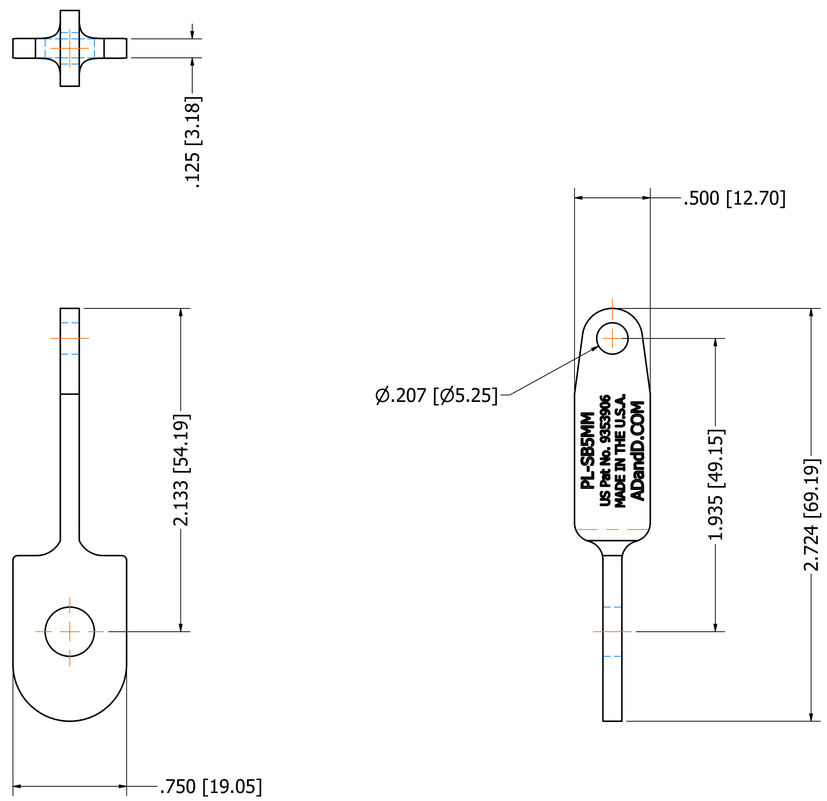

ZONE	REV	DESCRIPTION	DATE	APPROVED BY
	A	RELEASED TO PRODUCTION	3/6/2020	S. RILEY

REVISIONS

PATENT PENDING

BREAK ALL SHARP EDGES AND REMOVE ALL BURRS UNLESS OTHERWISE SPECIFIED

MARK DETAILS WITH P/N, MATERIAL & HEAT TREAT SPEC UNLESS OTHERWISE SPECIFIED

ALL WEIGHTS ARE ESTIMATED AND SHOULD NOT BE USED IN LOADING CALCULATIONS

STANDARD TOLERANCE UNLESS OTHERWISE SPECIFIED	
2 PLACE DEC.	± .030
3 PLACE DEC.	± .005
4 PLACE DEC.	±.0005
ANGLES	± 1°

THIRD ANGLE PROJECTION

GEOMETRIC CHARACTERISTIC SYMBOLS PER ASME Y14.5M - 1994			
	FLATNESS		CIRC RUNOUT
	STRAIGHTNESS		TOTAL RUNOUT
	CIRCULARITY		POSITION
	CYLINDRICITY		CONCENTRICITY
	PROFILE OF A SURFACE	Ø	DIAMETER
	PERPENDICULARITY	Ⓜ	AT MAX MATL CONDITION
	PARALLELISM	Ⓢ	REGARDLESS OF FEATURE SIZE
	ANGULARITY	Ⓛ	AT LEAST MATL CONDITION
		-A-	DATUM FEATURE

ADandD.com Pop-Link® Mounting Systems

PL 5mm SENSOR BRACKET

MATERIAL:		DESIGNED BY:DOUG
FINISH:		DRAWN BY: S. RILEY
WT.(LBS): 0.050 lbmass		DRAWN DATE: 7/30/2020
	SHEET. SIZE: D	SCALE: 2 / 1
DETAIL NO. PL-SB5MM		REV. A

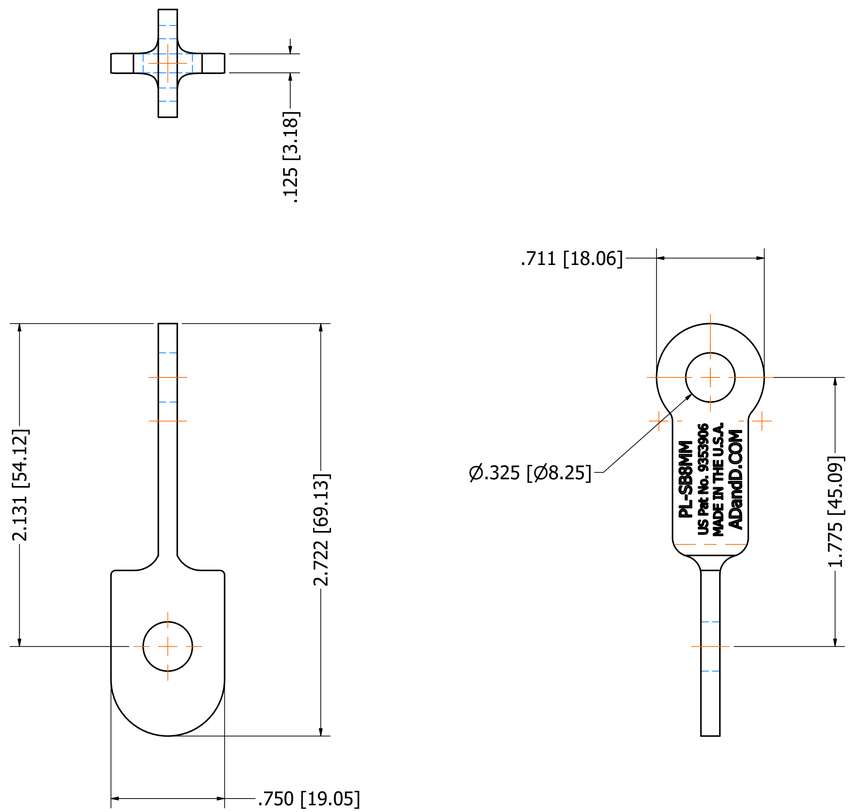

	A	RELEASED TO PRODUCTION	3/6/2020	S. RILEY
ZONE	REV	DESCRIPTION	DATE	APPROVED BY

REVISIONS

PATENT PENDING

BREAK ALL SHARP EDGES AND REMOVE ALL BURRS UNLESS OTHERWISE SPECIFIED

MARK DETAILS WITH P/N, MATERIAL & HEAT TREAT SPEC UNLESS OTHERWISE SPECIFIED

ALL WEIGHTS ARE ESTIMATED AND SHOULD NOT BE USED IN LOADING CALCULATIONS

STANDARD TOLERANCE UNLESS OTHERWISE SPECIFIED	
2 PLACE DEC.	± .030
3 PLACE DEC.	± .005
4 PLACE DEC.	±.0005
ANGLES	± 1°

THIRD ANGLE PROJECTION

GEOMETRIC CHARACTERISTIC SYMBOLS PER ASME Y14.5M - 1994

	FLATNESS		CIRC RUNOUT
	STRAIGHTNESS		TOTAL RUNOUT
	CIRCULARITY		POSITION
	CYLINDRICITY		CONCENTRICITY
	PROFILE OF A SURFACE	Ø	DIAMETER
	PERPENDICULARITY	Ⓜ	AT MAX MATL CONDITION
	PARALLELISM	Ⓢ	REGARDLESS OF FEATURE SIZE
	ANGULARITY	Ⓛ	AT LEAST MATL CONDITION
		-A-	DATUM FEATURE

ADandD.com Pop-Link® Mounting Systems

PL 8mm SENSOR BRACKET

MATERIAL:		DESIGNED BY:DOUG
FINISH:		DRAWN BY: S. RILEY
WT.(LBS): 0.052 lbmass		DRAWN DATE: 7/30/2020
	SHEET. SIZE: D	SCALE: 2 / 1
DETAIL NO. PL-SB8MM		REV. A

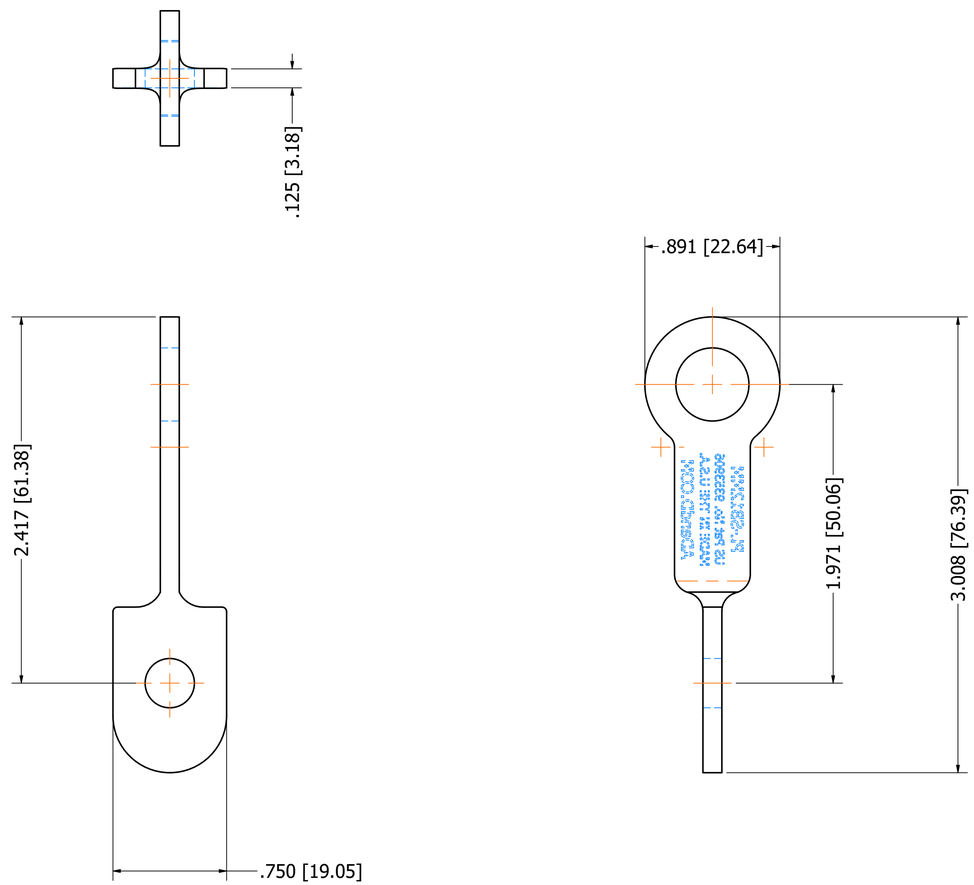

ZONE	REV	DESCRIPTION	DATE	APPROVED BY
	A	RELEASED TO PRODUCTION	3/6/2020	S. RILEY

REVISIONS

PATENT PENDING

BREAK ALL SHARP EDGES AND REMOVE ALL BURRS UNLESS OTHERWISE SPECIFIED

MARK DETAILS WITH P/N, MATERIAL & HEAT TREAT SPEC UNLESS OTHERWISE SPECIFIED

ALL WEIGHTS ARE ESTIMATED AND SHOULD NOT BE USED IN LOADING CALCULATIONS

STANDARD TOLERANCE
UNLESS OTHERWISE SPECIFIED

2 PLACE DEC. ± .030
3 PLACE DEC. ± .005
4 PLACE DEC. ±.0005
ANGLES ± 1˚

THIRD ANGLE PROJECTION

GEOMETRIC CHARACTERISTIC SYMBOLS
PER ASME Y14.5M - 1994

	FLATNESS		CIRC RUNOUT
	STRAIGHTNESS		TOTAL RUNOUT
	CIRCULARITY		POSITION
	CYLINDRICITY		CONCENTRICITY
	PROFILE OF A SURFACE	Ø	DIAMETER
	PERPENDICULARITY	Ⓜ	AT MAX MATL CONDITION
	PARALLELISM	Ⓢ	REGARDLESS OF FEATURE SIZE
	ANGULARITY	Ⓛ	AT LEAST MATL CONDITION
		-A-	DATUM FEATURE

ADandD.com Pop-Link® Mounting Systems

PL 12mm SENSOR BRACKET

MATERIAL:		DESIGNED BY:DOUG
FINISH:		DRAWN BY: S. RILEY
WT.(LBS): 0.058 lbmass		DRAWN DATE: 7/30/2020
	SHEET. SIZE: D	SCALE: 2 / 1
DETAIL NO. PL-SB12MM		REV. A

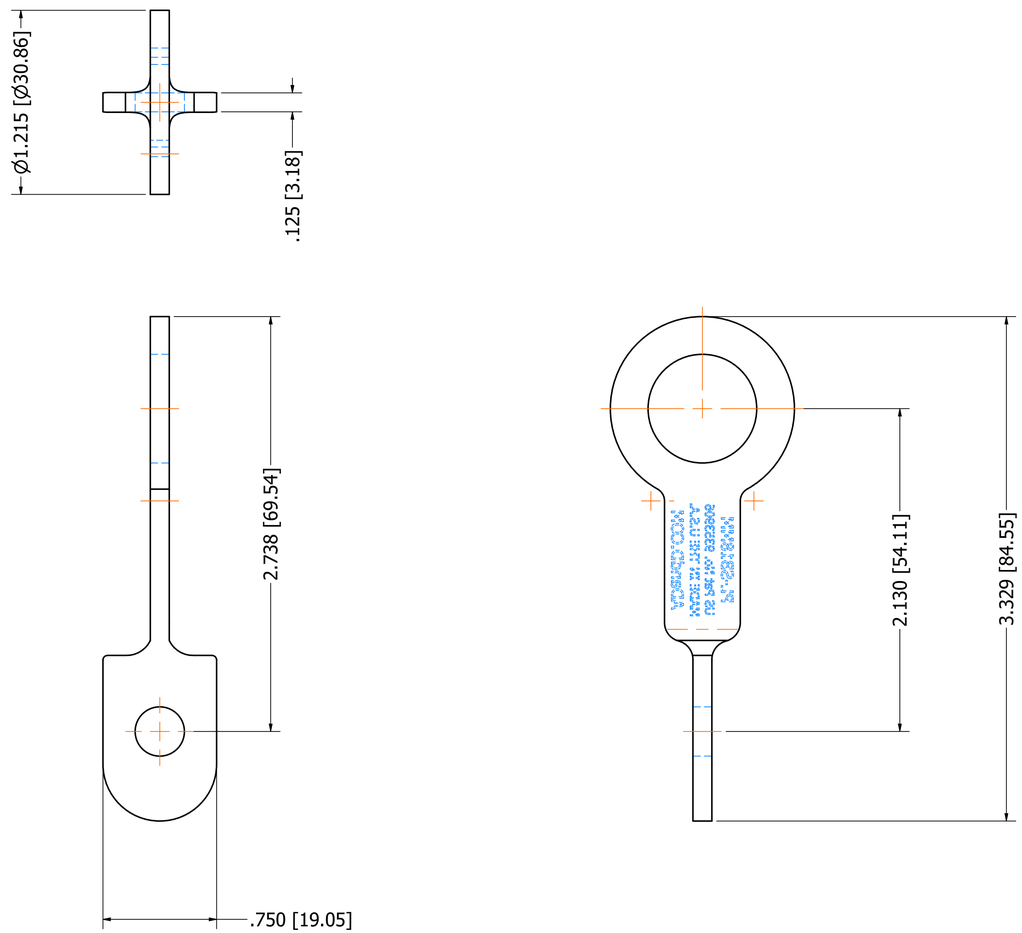

ZONE	REV	DESCRIPTION	DATE	APPROVED BY
	A	RELEASED TO PRODUCTION	3/6/2020	S. RILEY

REVISIONS

PATENT PENDING

BREAK ALL SHARP EDGES AND REMOVE ALL BURRS UNLESS OTHERWISE SPECIFIED

MARK DETAILS WITH P/N, MATERIAL & HEAT TREAT SPEC UNLESS OTHERWISE SPECIFIED

ALL WEIGHTS ARE ESTIMATED AND SHOULD NOT BE USED IN LOADING CALCULATIONS

STANDARD TOLERANCE
UNLESS OTHERWISE SPECIFIED

2 PLACE DEC. ± .030
3 PLACE DEC. ± .005
4 PLACE DEC. ±.0005
ANGLES ± 1°

THIRD ANGLE PROJECTION

GEOMETRIC CHARACTERISTIC SYMBOLS
PER ASME Y14.5M - 1994

	FLATNESS		CIRC RUNOUT
	STRAIGHTNESS		TOTAL RUNOUT
	CIRCULARITY		POSITION
	CYLINDRICITY		CONCENTRICITY
	PROFILE OF A SURFACE	Ø	DIAMETER
	PERPENDICULARITY	Ⓜ	AT MAX MATL CONDITION
	PARALLELISM	Ⓢ	REGARDLESS OF FEATURE SIZE
	ANGULARITY	Ⓛ	AT LEAST MATL CONDITION
		-A-	DATUM FEATURE

ADandD.com Pop-Link® Mounting Systems

PL 18mm SENSOR BRACKET

MATERIAL:		DESIGNED BY:DOUG
FINISH:		DRAWN BY: S. RILEY
WT.(LBS): 0.070 lbmass		DRAWN DATE: 7/30/2020
	SHEET. SIZE: D	SCALE: 2 / 1
DETAIL NO. PL-SB18MM		REV. A

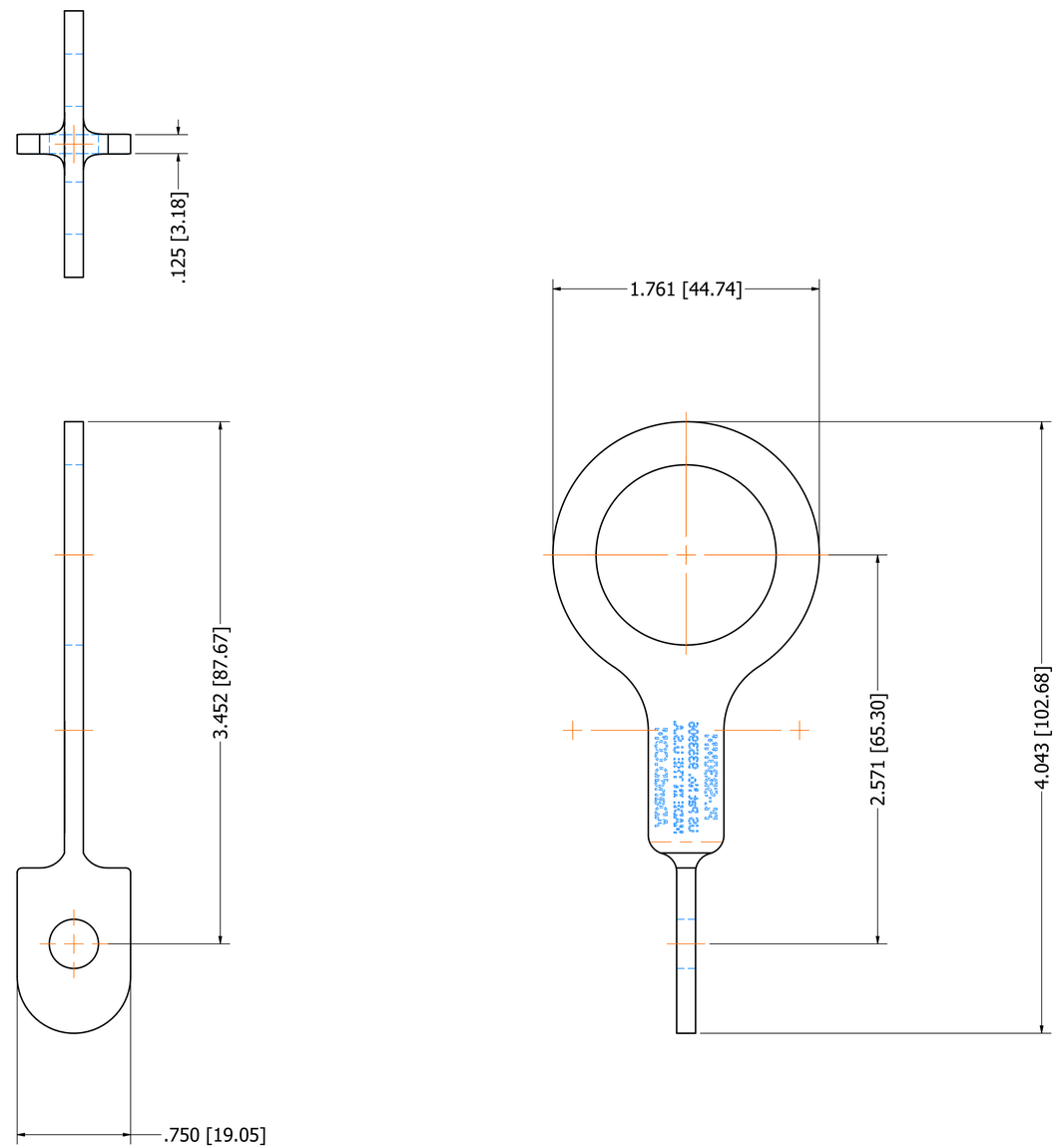

	A	RELEASED TO PRODUCTION	3/6/2020	S. RILEY
ZONE	REV	DESCRIPTION	DATE	APPROVED BY

REVISIONS

PATENT PENDING

BREAK ALL SHARP EDGES AND REMOVE ALL BURRS UNLESS OTHERWISE SPECIFIED

MARK DETAILS WITH P/N, MATERIAL & HEAT TREAT SPEC UNLESS OTHERWISE SPECIFIED

ALL WEIGHTS ARE ESTIMATED AND SHOULD NOT BE USED IN LOADING CALCULATIONS

STANDARD TOLERANCE
UNLESS OTHERWISE SPECIFIED

2 PLACE DEC. ± .030
3 PLACE DEC. ± .005
4 PLACE DEC. ±.0005
ANGLES ± 1°

THIRD ANGLE PROJECTION

GEOMETRIC CHARACTERISTIC SYMBOLS
PER ASME Y14.5M - 1994

	FLATNESS		CIRC RUNOUT
	STRAIGHTNESS		TOTAL RUNOUT
	CIRCULARITY		POSITION
	CYLINDRICITY		CONCENTRICITY
	PROFILE OF A SURFACE	Ø	DIAMETER
	PERPENDICULARITY	Ⓜ	AT MAX MATL CONDITION
	PARALLELISM	Ⓢ	REGARDLESS OF FEATURE SIZE
	ANGULARITY	Ⓛ	AT LEAST MATL CONDITION
		-A-	DATUM FEATURE

ADandD.com Pop-Link® Mounting Systems

PL 30mm SENSOR BRACKET

MATERIAL:		DESIGNED BY:DOUG
FINISH:		DRAWN BY: S. RILEY
WT.(LBS): 0.094 lbmass		DRAWN DATE: 7/30/2020
	SHEET. SIZE: D	SCALE: 2 / 1

DETAIL NO. PL-SB30MM

REV. A

APPLICABLE PRODUCTS		
PRODUCT NAME	MOUNTING PATTERN	BOLT CLEARANCE
BANNER Q4X SERIES	G,J OR H,K	Ø3mm
IFM-O1D300	A,D	Ø4mm
IFM-O213xx	A,E	Ø4mm
IFM-O2D2xx	A,E	Ø4mm
IFM-O2I500	N,O	Ø4mm
IFM-O2V1xx	A,E	Ø4mm
IFM-O3D3xx	B,F	Ø5mm
IFM-O5D100	A,C	Ø4mm
IFM-O6P202	G,J	Ø3mm
IFM-O8H216	G,I	Ø3mm
IFM-OGP280	H,K	Ø3mm
IFM-OGP281	H,K	Ø3mm
KEYENCE #LR-Z (ANY MODEL W/ 24.1mm HOLE SPREAD)	H,K	Ø3mm
KEYENCE #LR-Z (ANY MODEL W/ 25.4mm HOLE SPREAD)	G,J	Ø3mm
KEYENCE IV-HG SERIES	G,L	Ø3mm
KEYENCE IV2 SERIES	A,M G,L	Ø4mm Ø3mm
KEYENCE SPOT ILLUMINATION C-MOUNT LENS ADAPTER OP-87896	J,K	Ø3mm
OMRON E3S-DB SERIES	A,C	Ø3mm

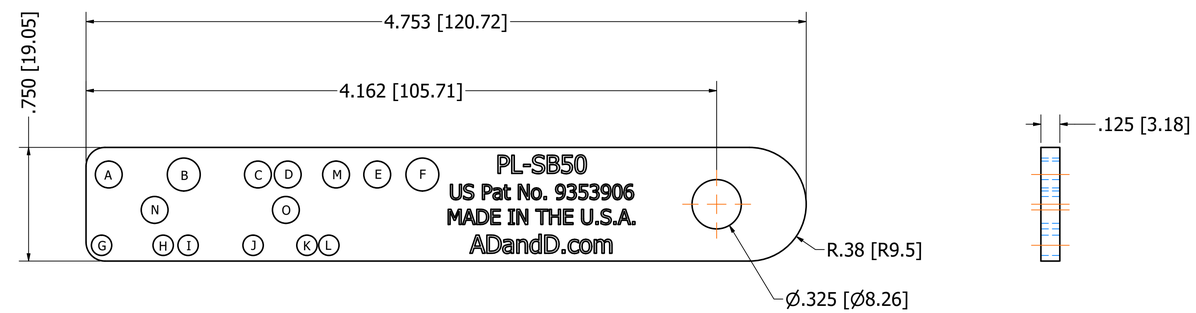

PATENT PENDING

BREAK ALL SHARP EDGES AND REMOVE ALL BURRS UNLESS OTHERWISE SPECIFIED

MARK DETAILS WITH P/N, MATERIAL & HEAT TREAT SPEC UNLESS OTHERWISE SPECIFIED

ALL WEIGHTS ARE ESTIMATED AND SHOULD NOT BE USED IN LOADING CALCULATIONS

STANDARD TOLERANCE
UNLESS OTHERWISE SPECIFIED

2 PLACE DEC. ± .030
3 PLACE DEC. ± .005
4 PLACE DEC. ±.0005
ANGLES ± 1°

THIRD ANGLE PROJECTION

GEOMETRIC CHARACTERISTIC SYMBOLS
PER ASME Y14.5M - 1994

	FLATNESS		CIRC RUNOUT
	STRAIGHTNESS		TOTAL RUNOUT
	CIRCULARITY		POSITION
	CYLINDRICITY		CONCENTRICITY
	PROFILE OF A SURFACE	Ø	DIAMETER
	PERPENDICULARITY	Ⓜ	AT MAX MATL CONDITION
	PARALLELISM	Ⓢ	REGARDLESS OF FEATURE SIZE
	ANGULARITY	Ⓛ	AT LEAST MATL CONDITION
		-A-	DATUM FEATURE

ZONE	REV	DESCRIPTION	DATE	APPROVED BY
	A	RELEASED TO PRODUCTION	3/6/2020	S. RILEY

REVISIONS

ADandD.com Pop-Link® Mounting Systems

SENSOR MOUNTING BRACKET

MATERIAL:		DESIGNED BY:S. RILEY
FINISH:		DRAWN BY: S. RILEY
WT.(LBS): 0.111 lbmass		DRAWN DATE: 7/30/2020
	SHEET. SIZE: D	SCALE: 2 / 1
DETAIL NO. PL-SB50		REV. A

APPLICABLE PRODUCTS		
PRODUCT NAME	MOUNTING PATTERN	BOLT CLEARANCE
KEYENCE CA-DBB5	A,B	Ø3mm
KEYENCE IX SERIES SENSOR HEAD	C,D	Ø3mm
MICRO EPSILSON OPT NCDT ILD 1220_1320_1420_1420 CL1	D,E	Ø3mm
MICRO EPSILSON OPTO-NCDT ILD 1900	F,G	Ø3mm

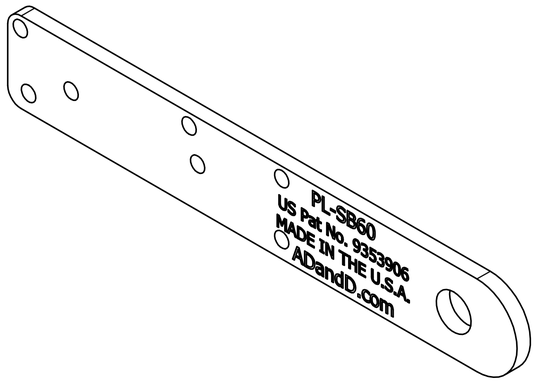

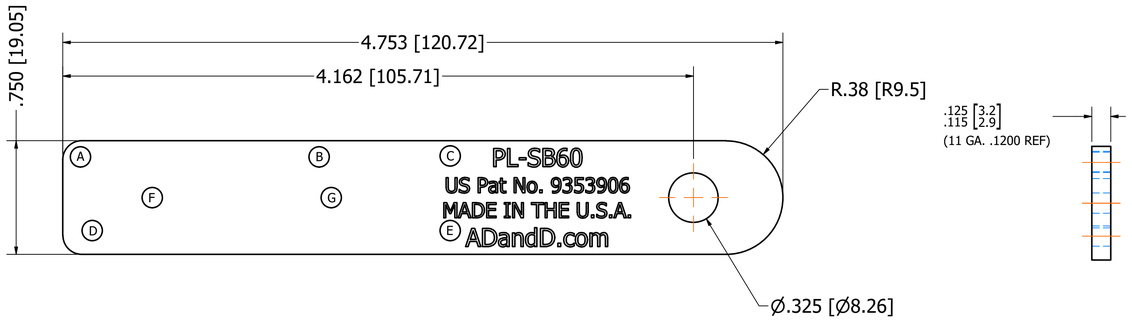

PATENT PENDING

BREAK ALL SHARP EDGES AND REMOVE ALL BURRS UNLESS OTHERWISE SPECIFIED

MARK DETAILS WITH P/N, MATERIAL & HEAT TREAT SPEC UNLESS OTHERWISE SPECIFIED

ALL WEIGHTS ARE ESTIMATED AND SHOULD NOT BE USED IN LOADING CALCULATIONS

STANDARD TOLERANCE
UNLESS OTHERWISE SPECIFIED

2 PLACE DEC. ± .030
3 PLACE DEC. ± .005
4 PLACE DEC. ±.0005
ANGLES ± 1°

THIRD ANGLE PROJECTION

GEOMETRIC CHARACTERISTIC SYMBOLS
PER ASME Y14.5M - 1994

	FLATNESS		CIRC RUNOUT
	STRAIGHTNESS		TOTAL RUNOUT
	CIRCULARITY		POSITION
	CYLINDRICITY		CONCENTRICITY
	PROFILE OF A SURFACE	Ø	DIAMETER
	PERPENDICULARITY	Ⓜ	AT MAX MATL CONDITION
	PARALLELISM	Ⓢ	REGARDLESS OF FEATURE SIZE
	ANGULARITY	Ⓛ	AT LEAST MATL CONDITION
		-A-	DATUM FEATURE

ZONE	REV	DESCRIPTION	DATE	APPROVED BY
	A	RELEASED TO PRODUCTION	3/6/2020	N. CARLSON

REVISIONS

ADandD.com Pop-Link® Mounting Systems

MATERIAL:		DESIGNED BY:N. CARLSON
FINISH:		DRAWN BY: N. CARLSON
WT.(LBS): 0.120 lbmass		DRAWN DATE: 12/10/2020
	SHEET. SIZE: D	SCALE: 2
DETAIL NO. PL-SB60		REV. A

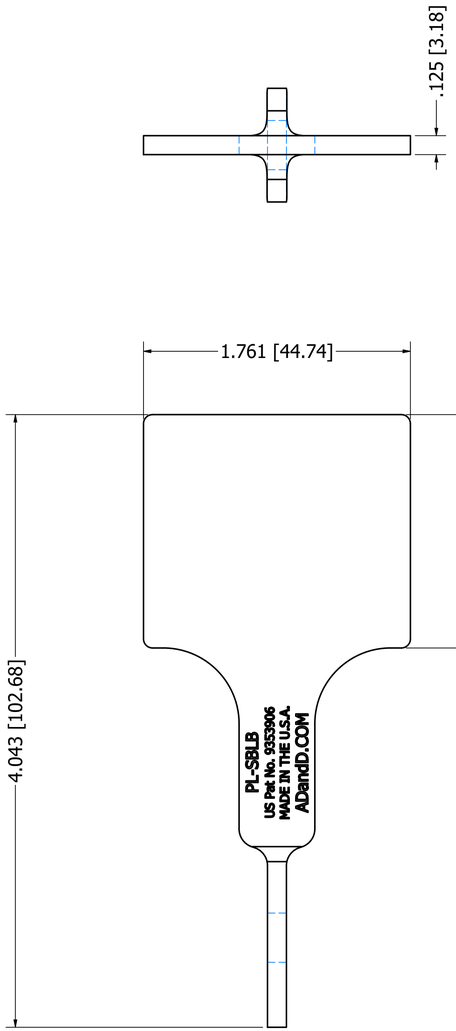

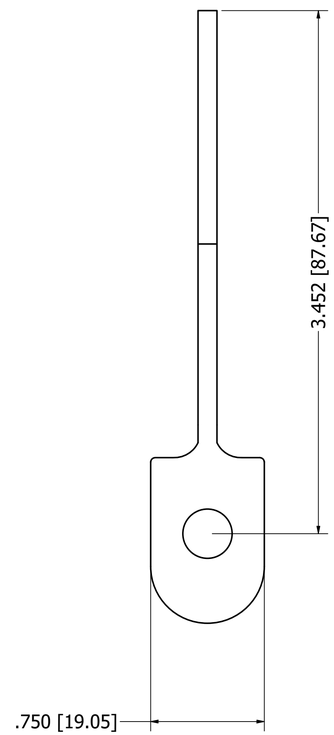

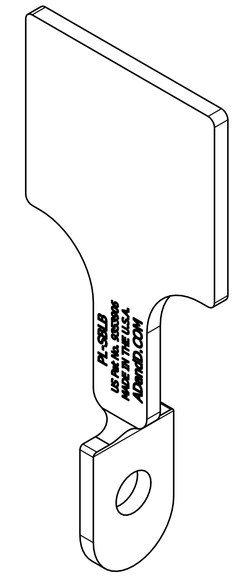

ZONE	REV	DESCRIPTION	DATE	APPROVED BY
	A	RELEASED TO PRODUCTION	3/6/2020	S. RILEY

REVISIONS

PATENT PENDING

BREAK ALL SHARP EDGES AND REMOVE ALL BURRS UNLESS OTHERWISE SPECIFIED

MARK DETAILS WITH P/N, MATERIAL & HEAT TREAT SPEC UNLESS OTHERWISE SPECIFIED

ALL WEIGHTS ARE ESTIMATED AND SHOULD NOT BE USED IN LOADING CALCULATIONS

STANDARD TOLERANCE UNLESS OTHERWISE SPECIFIED	GEOMETRIC CHARACTERISTIC SYMBOLS PER ASME Y14.5M - 1994	
2 PLACE DEC. ± .030	FLATNESS	CIRC RUNOUT
3 PLACE DEC. ± .005	STRAIGHTNESS	TOTAL RUNOUT
4 PLACE DEC. ±.0005	CIRCULARITY	POSITION
ANGLES ± 1°	CYLINDRICITY	CONCENTRICITY
THIRD ANGLE PROJECTION	PROFILE OF A SURFACE	DIAMETER
	PERPENDICULARITY	AT MAX MATL CONDITION
	PARALLELISM	REGARDLESS OF FEATURE SIZE
	ANGULARITY	AT LEAST MATL CONDITION
	-A-	DATUM FEATURE

ADandD.com Pop-Link® Mounting Systems

PL SENSOR BRACKET LARGE BLANK

MATERIAL:	DESIGNED BY:DOUG
FINISH:	DRAWN BY: S. RILEY
WT.(LBS): 0.151 lbmass	DRAWN DATE: 7/31/2020
SHEET. SIZE: D	SCALE: 2 / 1
DETAIL NO. PL-SBLB	REV. A

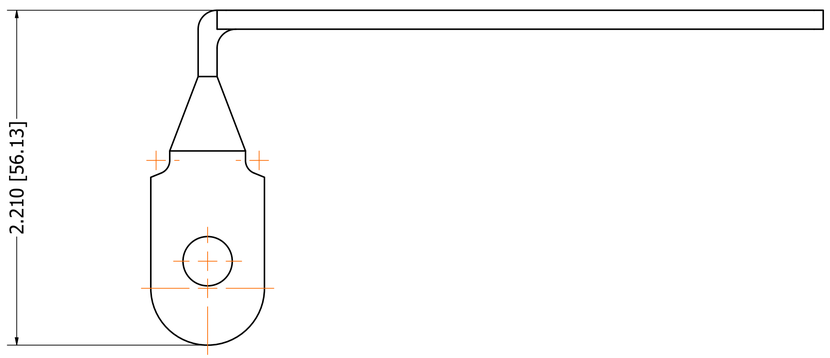

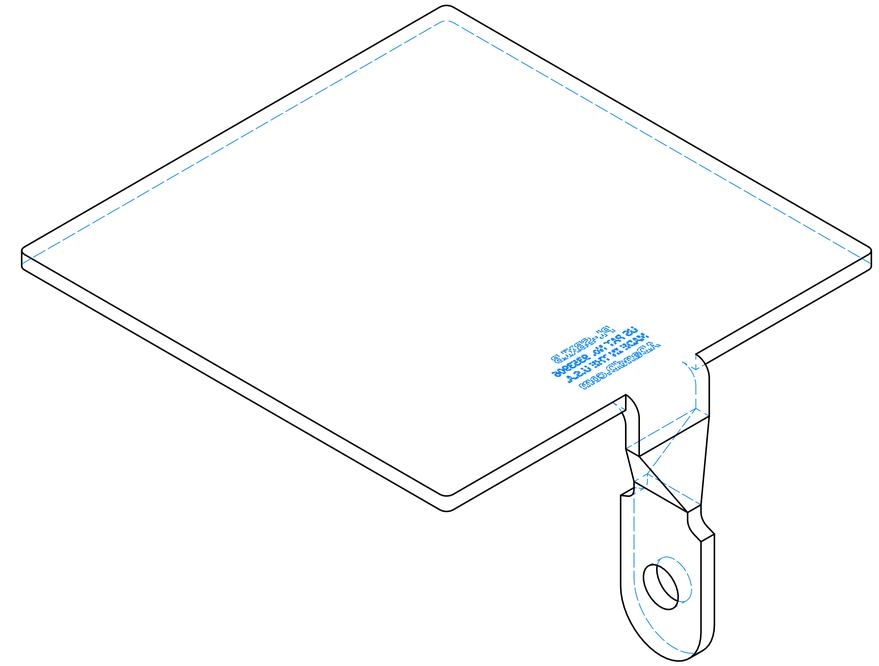

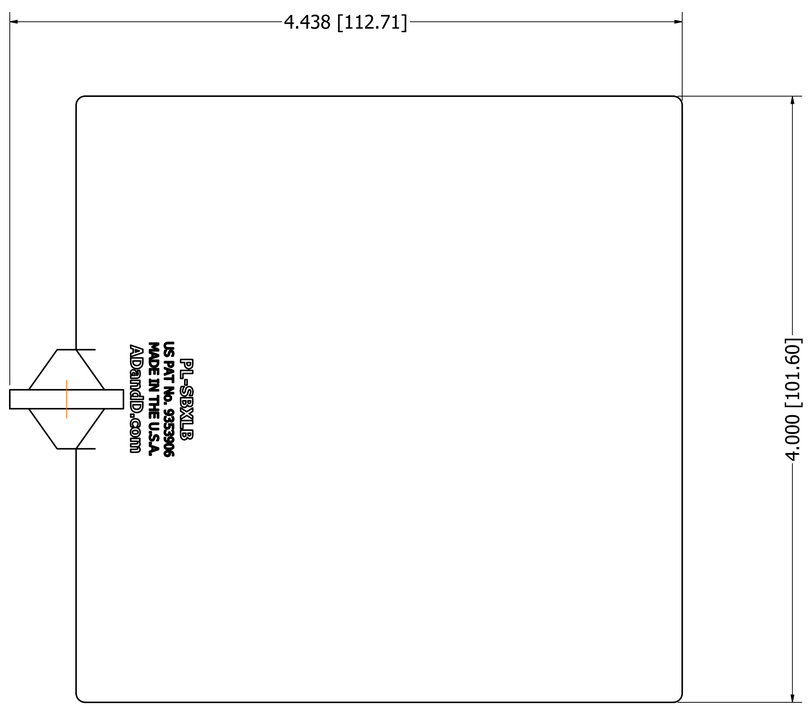

ZONE	REV	DESCRIPTION	DATE	APPROVED BY
	A	RELEASED TO PRODUCTION	3/6/2020	S. RILEY

REVISIONS

PATENT PENDING

BREAK ALL SHARP EDGES AND REMOVE ALL BURRS UNLESS OTHERWISE SPECIFIED

MARK DETAILS WITH P/N, MATERIAL & HEAT TREAT SPEC UNLESS OTHERWISE SPECIFIED

ALL WEIGHTS ARE ESTIMATED AND SHOULD NOT BE USED IN LOADING CALCULATIONS

STANDARD TOLERANCE
UNLESS OTHERWISE SPECIFIED

2 PLACE DEC. ± .030
3 PLACE DEC. ± .005
4 PLACE DEC. ±.0005
ANGLES ± 1°

THIRD ANGLE PROJECTION

GEOMETRIC CHARACTERISTIC SYMBOLS
PER ASME Y14.5M - 1994

▱	FLATNESS	↗	CIRC RUNOUT
—	STRAIGHTNESS	⌰	TOTAL RUNOUT
○	CIRCULARITY	⌖	POSITION
⌭	CYLINDRICITY	◎	CONCENTRICITY
⌓	PROFILE OF A SURFACE	Ø	DIAMETER
⊥	PERPENDICULARITY	Ⓜ	AT MAX MATL CONDITION
//	PARALLELISM	Ⓢ	REGARDLESS OF FEATURE SIZE
∠	ANGULARITY	Ⓛ	AT LEAST MATL CONDITION
		-A-	DATUM FEATURE

ADandD.com Pop-Link® Mounting Systems

PL SENSOR BRACKET SBXLB

MATERIAL:	DESIGNED BY:S. RILEY
FINISH:	DRAWN BY: S. RILEY
WT.(LBS): 0.631 lbmass	DRAWN DATE: 7/30/2020
SHEET. SIZE: D	SCALE: 2 / 1
DETAIL NO. PL-SBXLB	REV. A

APPLICABLE PRODUCTS	
PRODUCT NAME	RECOMMENDED HARDWARE (INCLUDED)
ALL COMPATIBLE CAMERAS	(4) S.H.C.S. - M3-0.5mm X 12mm 18-8SS
HDPL-BALLBASE(NOT INCLUDED)	(4) S.H.C.S. - M6-1.0mm X 20mm 18-8SS

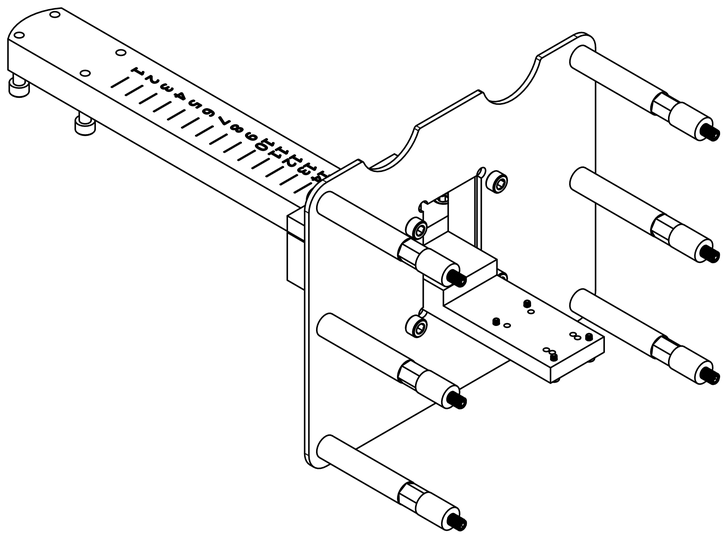

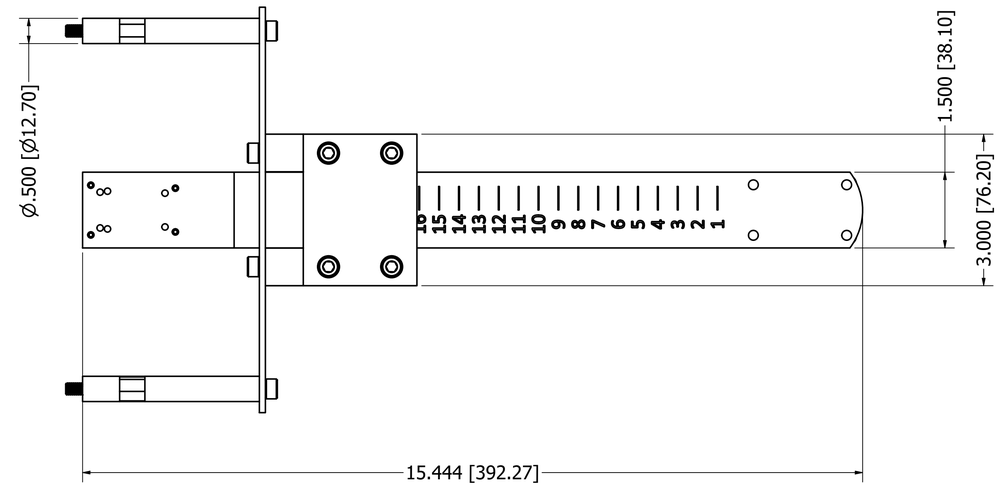

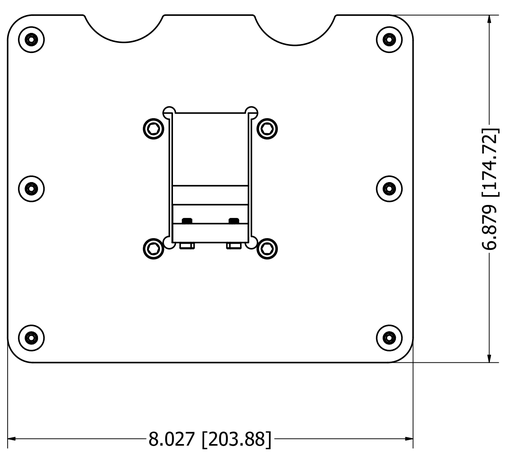

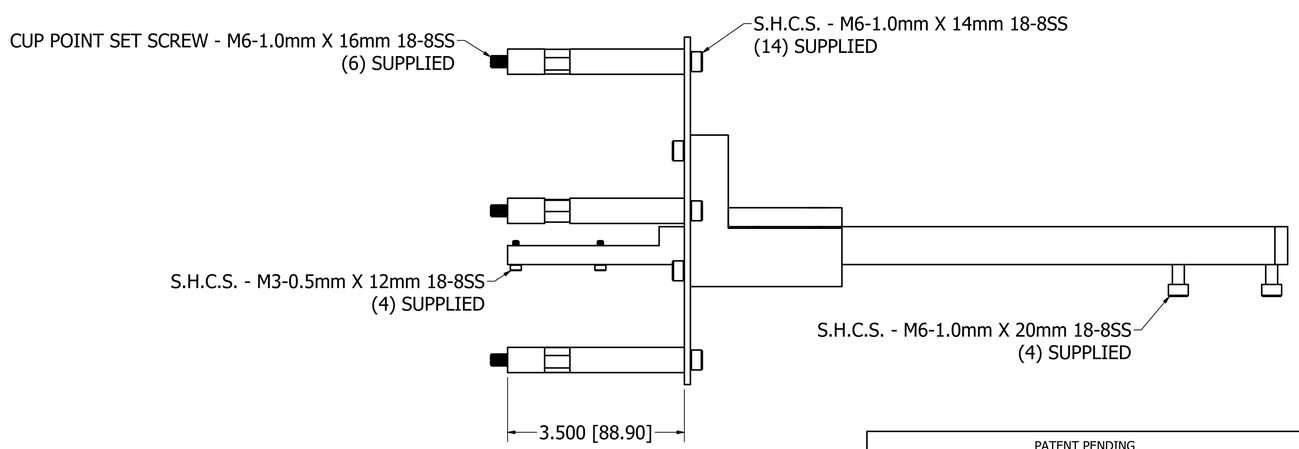

PATENT PENDING

BREAK ALL SHARP EDGES AND REMOVE ALL BURRS UNLESS OTHERWISE SPECIFIED

MARK DETAILS WITH P/N, MATERIAL & HEAT TREAT SPEC UNLESS OTHERWISE SPECIFIED

ALL WEIGHTS ARE ESTIMATED AND SHOULD NOT BE USED IN LOADING CALCULATIONS

STANDARD TOLERANCE UNLESS OTHERWISE SPECIFIED	GEOMETRIC CHARACTERISTIC SYMBOLS PER ASME Y14.5M - 1994	
2 PLACE DEC. ± .030	FLATNESS	CIRC RUNOUT
3 PLACE DEC. ± .005	STRAIGHTNESS	TOTAL RUNOUT
4 PLACE DEC. ±.0005	CIRCULARITY	POSITION
ANGLES ± 1°	CYLINDRICITY	CONCENTRICITY
THIRD ANGLE PROJECTION	PROFILE OF A SURFACE	DIAMETER
	PERPENDICULARITY	AT MAX MATL CONDITION
	PARALLELISM	REGARDLESS OF FEATURE SIZE
	ANGULARITY	AT LEAST MATL CONDITION
	-A-	DATUM FEATURE

ZONE	REV	DESCRIPTION	DATE	APPROVED BY
	A	RELEASED TO PRODUCTION	3/6/2020	S. RILEY

REVISIONS

ADandD.com Pop-Link® Mounting Systems

COMBINATION LIGHT AND CAMERA SYSTEM BRACKET

MATERIAL:		DESIGNED BY:D. BIDDINGER
FINISH:		DRAWN BY: S. RILEY
WT.(LBS): 4.938 lbmass		DRAWN DATE: 6/15/2020
	SHEET. SIZE: D	SCALE: 2 / 3
DETAIL NO. PL-SYS1		REV. A